Write your name here

Surname	Other names

Pearson Edexcel GCE

Centre Number | Candidate Number

Mechanics M2

Advanced/Advanced Subsidiary

Friday 17 June 2016 – Afternoon
Time: 1 hour 30 minutes

Paper Reference
6678/01

You must have:
Mathematical Formulae and Statistical Tables (Pink)

Total Marks

Candidates may use any calculator allowed by the regulations of the Joint Council for Qualifications. Calculators must not have the facility for symbolic algebra manipulation, differentiation and integration, or have retrievable mathematical formulae stored in them.

Instructions

- Use **black** ink or ball-point pen.
- If pencil is used for diagrams/sketches/graphs it must be dark (HB or B). Coloured pencils and highlighter pens must not be used.
- **Fill in the boxes** at the top of this page with your name, centre number and candidate number.
- Answer **all** questions and ensure that your answers to parts of questions are clearly labelled.
- Answer the questions in the spaces provided – *there may be more space than you need.*
- You should show sufficient working to make your methods clear. Answers without working may not gain full credit.
- Whenever a numerical value of g is required, take $g = 9.8$ m s^{-2}, and give your answer to either two significant figures or three significant figures.
- When a calculator is used, the answer should be given to an appropriate degree of accuracy.

Information

- The total mark for this paper is 75.
- The marks for **each** question are shown in brackets – *use this as a guide as to how much time to spend on each question.*

Advice

- Read each question carefully before you start to answer it.
- Try to answer every question.
- Check your answers if you have time at the end.

Turn over

P46710A

©2016 Pearson Education Ltd.

1/1/1/

P 4 6 7 1 0 A 0 1 2 8

PEARSON

Leave blank

1. A particle P moves along a straight line. The speed of P at time t seconds ($t \geqslant 0$) is v m s^{-1}, where $v = (pt^2 + qt + r)$ and p, q and r are constants. When $t = 2$ the speed of P has its minimum value. When $t = 0$, $v = 11$ and when $t = 2$, $v = 3$

Find

(a) the acceleration of P when $t = 3$

(8)

(b) the distance travelled by P in the third second of the motion.

(5)

DO NOT WRITE IN THIS AREA
DO NOT WRITE IN THIS AREA
DO NOT WRITE IN THIS AREA

DO NOT WRITE IN THIS AREA
DO NOT WRITE IN THIS AREA
DO NOT WRITE IN THIS AREA

Leave blank

Question 1 continued

Leave blank

Question 1 continued

DO NOT WRITE IN THIS AREA
DO NOT WRITE IN THIS AREA
DO NOT WRITE IN THIS AREA

Leave blank

Question 1 continued

(Total 13 marks)

Q1

DO NOT WRITE IN THIS AREA

DO NOT WRITE IN THIS AREA

DO NOT WRITE IN THIS AREA

Leave blank

2. A car of mass 800 kg is moving on a straight road which is inclined at an angle θ to the horizontal, where $\sin\theta = \frac{1}{20}$. The resistance to the motion of the car from non-gravitational forces is modelled as a constant force of magnitude R newtons. When the car is moving up the road at a constant speed of $12.5\,\text{m s}^{-1}$, the engine of the car is working at a constant rate of $3P$ watts. When the car is moving down the road at a constant speed of $12.5\,\text{m s}^{-1}$, the engine of the car is working at a constant rate of P watts.

(a) Find

(i) the value of P,

(ii) the value of R.

(6)

When the car is moving up the road at $12.5\,\text{m s}^{-1}$ the engine is switched off and the car comes to rest, without braking, in a distance d metres. The resistance to the motion of the car from non-gravitational forces is still modelled as a constant force of magnitude R newtons.

(b) Use the work-energy principle to find the value of d.

(4)

DO NOT WRITE IN THIS AREA DO NOT WRITE IN THIS AREA DO NOT WRITE IN THIS AREA

Leave blank

Question 2 continued

DO NOT WRITE IN THIS AREA
DO NOT WRITE IN THIS AREA
DO NOT WRITE IN THIS AREA

Leave blank

Question 2 continued

DO NOT WRITE IN THIS AREA

DO NOT WRITE IN THIS AREA

DO NOT WRITE IN THIS AREA

Leave blank

Question 2 continued

(Total 10 marks)

Q2

DO NOT WRITE IN THIS AREA

DO NOT WRITE IN THIS AREA

DO NOT WRITE IN THIS AREA

Leave blank

3. A particle of mass 0.6 kg is moving with constant velocity $(c\mathbf{i} + 2c\mathbf{j})\,\mathrm{m\,s^{-1}}$, where c is a positive constant. The particle receives an impulse of magnitude $2\sqrt{10}$ N s.

Immediately after receiving the impulse the particle has velocity $(2c\mathbf{i} - c\mathbf{j})\,\mathrm{m\,s^{-1}}$.

Find the value of c.

(6)

DO NOT WRITE IN THIS AREA
DO NOT WRITE IN THIS AREA
DO NOT WRITE IN THIS AREA

Leave blank

Question 3 continued

Q3

(Total 6 marks)

DO NOT WRITE IN THIS AREA
DO NOT WRITE IN THIS AREA
DO NOT WRITE IN THIS AREA

Leave blank

4.

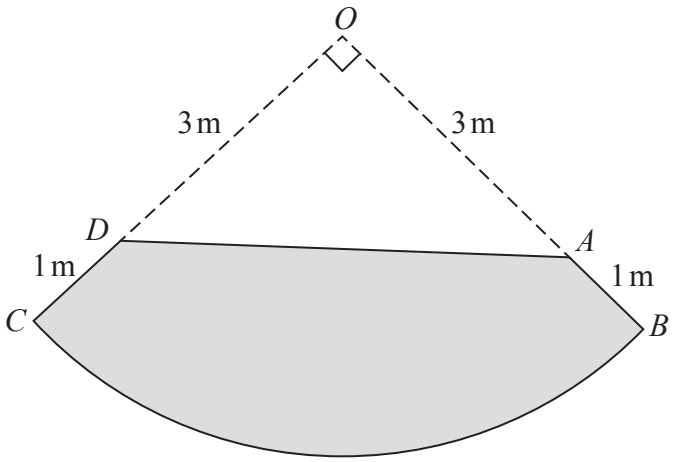

Figure 1

The uniform lamina OBC is one quarter of a circular disc with centre O and radius 4 m. The points A and D, on OB and OC respectively, are 3 m from O. The uniform lamina $ABCD$, shown shaded in Figure 1, is formed by removing the triangle OAD from OBC.

Given that the centre of mass of one quarter of a uniform circular disc of radius r is at a distance $\frac{4\sqrt{2}}{3\pi}r$ from the centre of the disc,

(a) find the distance of the centre of mass of the lamina $ABCD$ from AD.

(5)

The lamina is freely suspended from D and hangs in equilibrium.

(b) Find, to the nearest degree, the angle between DC and the downward vertical.

(4)

DO NOT WRITE IN THIS AREA
DO NOT WRITE IN THIS AREA
DO NOT WRITE IN THIS AREA

Leave blank

Question 4 continued

DO NOT WRITE IN THIS AREA
DO NOT WRITE IN THIS AREA
DO NOT WRITE IN THIS AREA

Leave blank

Question 4 continued

DO NOT WRITE IN THIS AREA

DO NOT WRITE IN THIS AREA

DO NOT WRITE IN THIS AREA

Leave blank

Question 4 continued

Q4

(Total 9 marks)

DO NOT WRITE IN THIS AREA
DO NOT WRITE IN THIS AREA
DO NOT WRITE IN THIS AREA

Leave blank

5.

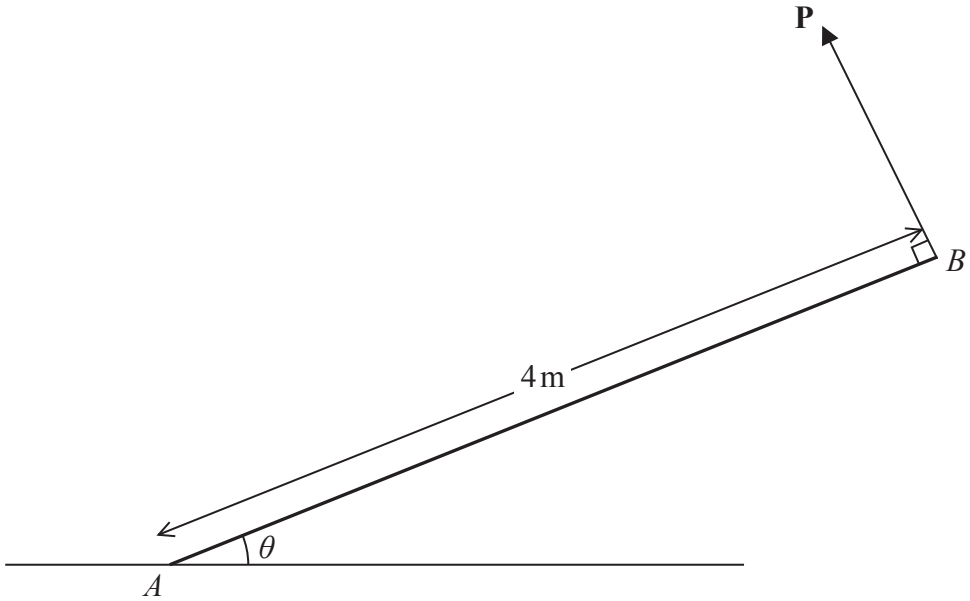

Figure 2

A non-uniform rod AB, of mass 5 kg and length 4 m, rests with one end A on rough horizontal ground. The centre of mass of the rod is d metres from A. The rod is held in limiting equilibrium at an angle θ to the horizontal by a force **P**, which acts in a direction perpendicular to the rod at B, as shown in Figure 2. The line of action of **P** lies in the same vertical plane as the rod.

(a) Find, in terms of d, g and θ,

(i) the magnitude of the vertical component of the force exerted on the rod by the ground,

(ii) the magnitude of the friction force acting on the rod at A.

(8)

Given that $\tan\theta = \frac{5}{12}$ and that the coefficient of friction between the rod and the ground is $\frac{1}{2}$,

(b) find the value of d.

(4)

DO NOT WRITE IN THIS AREA
DO NOT WRITE IN THIS AREA
DO NOT WRITE IN THIS AREA

Leave blank

Question 5 continued

DO NOT WRITE IN THIS AREA
DO NOT WRITE IN THIS AREA
DO NOT WRITE IN THIS AREA

Leave blank

Question 5 continued

DO NOT WRITE IN THIS AREA
DO NOT WRITE IN THIS AREA
DO NOT WRITE IN THIS AREA

Leave blank

Question 5 continued

(Total 12 marks)

Q5

DO NOT WRITE IN THIS AREA

DO NOT WRITE IN THIS AREA

DO NOT WRITE IN THIS AREA

Leave blank

6. [*In this question,* **i** *is a horizontal unit vector and* **j** *is an upward vertical unit vector.*]

A particle P is projected from a fixed origin O with velocity $(3\mathbf{i} + 4\mathbf{j})\,\text{m s}^{-1}$. The particle moves freely under gravity and passes through the point A with position vector $\lambda(\mathbf{i} - \mathbf{j})\,\text{m}$, where λ is a positive constant.

(a) Find the value of λ.

(6)

(b) Find

(i) the speed of P at the instant when it passes through A,

(ii) the direction of motion of P at the instant when it passes through A.

(7)

DO NOT WRITE IN THIS AREA DO NOT WRITE IN THIS AREA DO NOT WRITE IN THIS AREA

Leave blank

Question 6 continued

DO NOT WRITE IN THIS AREA
DO NOT WRITE IN THIS AREA
DO NOT WRITE IN THIS AREA

Leave blank

Question 6 continued

DO NOT WRITE IN THIS AREA
DO NOT WRITE IN THIS AREA
DO NOT WRITE IN THIS AREA

Leave blank

Question 6 continued

(Total 13 marks)

Q6

DO NOT WRITE IN THIS AREA
DO NOT WRITE IN THIS AREA
DO NOT WRITE IN THIS AREA

Leave blank

7. Two particles A and B, of mass $2m$ and $3m$ respectively, are initially at rest on a smooth horizontal surface. Particle A is projected with speed $3u$ towards B. Particle A collides directly with particle B. The coefficient of restitution between A and B is $\frac{3}{4}$

(a) Find

(i) the speed of A immediately after the collision,

(ii) the speed of B immediately after the collision.

(7)

After the collision B hits a fixed smooth vertical wall and rebounds. The wall is perpendicular to the direction of motion of B. The coefficient of restitution between B and the wall is e. The magnitude of the impulse received by B when it hits the wall is $\frac{27}{4}mu$.

(b) Find the value of e.

(3)

(c) Determine whether there is a further collision between A and B after B rebounds from the wall.

(2)

DO NOT WRITE IN THIS AREA DO NOT WRITE IN THIS AREA DO NOT WRITE IN THIS AREA

Leave blank

Question 7 continued

DO NOT WRITE IN THIS AREA
DO NOT WRITE IN THIS AREA
DO NOT WRITE IN THIS AREA

Leave blank

Question 7 continued

DO NOT WRITE IN THIS AREA
DO NOT WRITE IN THIS AREA
DO NOT WRITE IN THIS AREA

Leave blank

Question 7 continued

DO NOT WRITE IN THIS AREA
DO NOT WRITE IN THIS AREA
DO NOT WRITE IN THIS AREA

Leave blank

Question 7 continued

Q7

(Total 12 marks)

TOTAL FOR PAPER: 75 MARKS

END

DO NOT WRITE IN THIS AREA

DO NOT WRITE IN THIS AREA

DO NOT WRITE IN THIS AREA

P 4 6 7 1 0 A 0 2 8 2 8