Centre No.						Paper Reference							Surname	Initial(s)
Candidate No.						6	6	7	8	/	0	1	Signature	

Paper Reference(s)

6678/01

Edexcel GCE

Mechanics M2

Advanced/Advanced Subsidiary

Friday 29 January 2010 – Morning

Time: 1 hour 30 minutes

Examiner's use only

Team Leader's use only

Question Number	Leave Blank
1	
2	
3	
4	
5	
6	
7	
8	
Total	

Materials required for examination
Mathematical Formulae (Pink or Green)

Items included with question papers
Nil

Candidates may use any calculator allowed by the regulations of the Joint Council for Qualifications. Calculators must not have the facility for symbolic algebra manipulation, differentiation and integration, or have retrievable mathematical formulae stored in them.

Instructions to Candidates

In the boxes above, write your centre number, candidate number, your surname, initials and signature.
Check that you have the correct question paper.
Answer ALL the questions.
You must write your answer to each question in the space following the question.
If you need more space to complete your answers to any question, use additional sheets.
Whenever a numerical value of g is required, take $g = 9.8$ m s^{-2}.
When a calculator is used, the answer should be given to an appropriate degree of accuracy.

Information for Candidates

A booklet 'Mathematical Formulae and Statistical Tables' is provided.
Full marks may be obtained for answers to ALL questions.
The marks for individual questions and the parts of questions are shown in round brackets: e.g. **(2)**.
There are 8 questions in this question paper. The total mark for this paper is 75.
There are 28 pages in this question paper. Any blank pages are indicated.

Advice to Candidates

You must ensure that your answers to parts of questions are clearly labelled.
You must show sufficient working to make your methods clear to the examiner.
Answers without working may not gain full credit.

This publication may be reproduced only in accordance with Edexcel Limited copyright policy.
©2010 Edexcel Limited.

Printer's Log. No.
M35102A
W850/R6678/57570 3/5/5/3

M 3 5 1 0 2 A 0 1 2 8

Turn over

edexcel
advancing learning, changing lives

Leave blank

1. A particle P moves along the x-axis. At time t seconds the velocity of P is $v\,\mathrm{m\,s^{-1}}$ in the positive x-direction, where $v = 3t^2 - 4t + 3$. When $t = 0$, P is at the origin O. Find the distance of P from O when P is moving with minimum velocity.

(8)

Leave blank

Question 1 continued

Q1

(Total 8 marks)

Leave blank

2. Two particles, P, of mass $2m$, and Q, of mass m, are moving along the same straight line on a smooth horizontal plane. They are moving in opposite directions towards each other and collide. Immediately before the collision the speed of P is $2u$ and the speed of Q is u. The coefficient of restitution between the particles is e, where $e < 1$. Find, in terms of u and e,

(i) the speed of P immediately after the collision,

(ii) the speed of Q immediately after the collision.

(7)

Leave blank

Question 2 continued

Q2

(Total 7 marks)

Leave blank

3. A particle of mass 0.5 kg is projected vertically upwards from ground level with a speed of $20\,\text{m}\,\text{s}^{-1}$. It comes to instantaneous rest at a height of 10 m above the ground. As the particle moves it is subject to air resistance of constant magnitude R newtons. Using the work-energy principle, or otherwise, find the value of R.

(6)

Leave blank

Question 3 continued

Q3

(Total 6 marks)

M 3 5 1 0 2 A 0 7 2 8

Turn over

Leave blank

4.

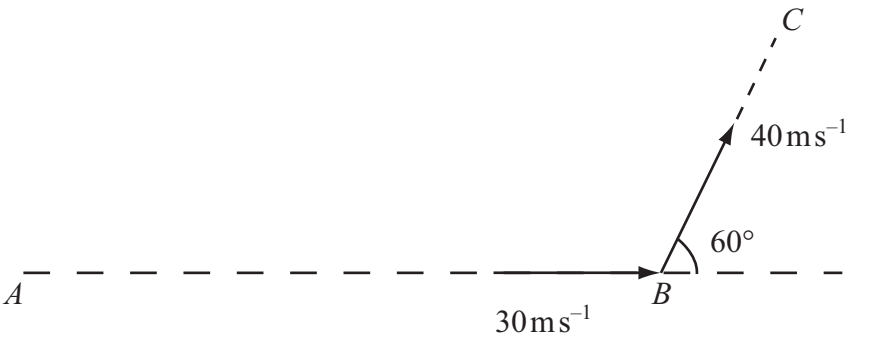

Figure 1

The points A, B and C lie in a horizontal plane. A batsman strikes a ball of mass 0.25 kg. Immediately before being struck, the ball is moving along the horizontal line AB with speed $30\,\text{m}\,\text{s}^{-1}$. Immediately after being struck, the ball moves along the horizontal line BC with speed $40\,\text{m}\,\text{s}^{-1}$. The line BC makes an angle of 60° with the original direction of motion AB, as shown in Figure 1.

Find, to 3 significant figures,

(i) the magnitude of the impulse given to the ball,

(ii) the size of the angle that the direction of this impulse makes with the original direction of motion AB.

(8)

M 3 5 1 0 2 A 0 8 2 8

Leave blank

Question 4 continued

Leave blank

Question 4 continued

Leave blank

Question 4 continued

Q4

(Total 8 marks)

M 3 5 1 0 2 A 0 1 1 2 8

Turn over

Leave blank

5. A cyclist and her bicycle have a total mass of 70 kg. She cycles along a straight horizontal road with constant speed $3.5\,\text{m}\,\text{s}^{-1}$. She is working at a constant rate of 490 W.

(a) Find the magnitude of the resistance to motion.

(4)

The cyclist now cycles down a straight road which is inclined at an angle θ to the horizontal, where $\sin\theta = \frac{1}{14}$, at a constant speed $U\,\text{m}\,\text{s}^{-1}$. The magnitude of the non-gravitational resistance to motion is modelled as $40U$ newtons. She is now working at a constant rate of 24 W.

(b) Find the value of U.

(7)

M 3 5 1 0 2 A 0 1 2 2 8

Leave blank

Question 5 continued

Leave blank

Question 5 continued

Leave blank

Question 5 continued

Q5

(Total 11 marks)

M 3 5 1 0 2 A 0 1 5 2 8

Turn over

Leave blank

6.

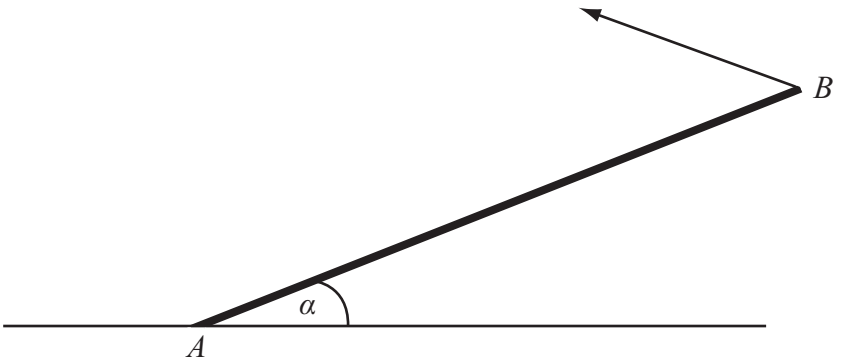

Figure 2

A uniform rod AB, of mass 20 kg and length 4 m, rests with one end A on rough horizontal ground. The rod is held in limiting equilibrium at an angle α to the horizontal, where $\tan \alpha = \frac{3}{4}$, by a force acting at B, as shown in Figure 2. The line of action of this force lies in the vertical plane which contains the rod. The coefficient of friction between the ground and the rod is 0.5. Find the magnitude of the normal reaction of the ground on the rod at A.

(7)

M 3 5 1 0 2 A 0 1 6 2 8

Leave blank

Question 6 continued

Leave blank

Question 6 continued

Leave blank

Question 6 continued

Q6

(Total 7 marks)

Leave blank

7. [*The centre of mass of a semi-circular lamina of radius r is* $\frac{4r}{3\pi}$ *from the centre*]

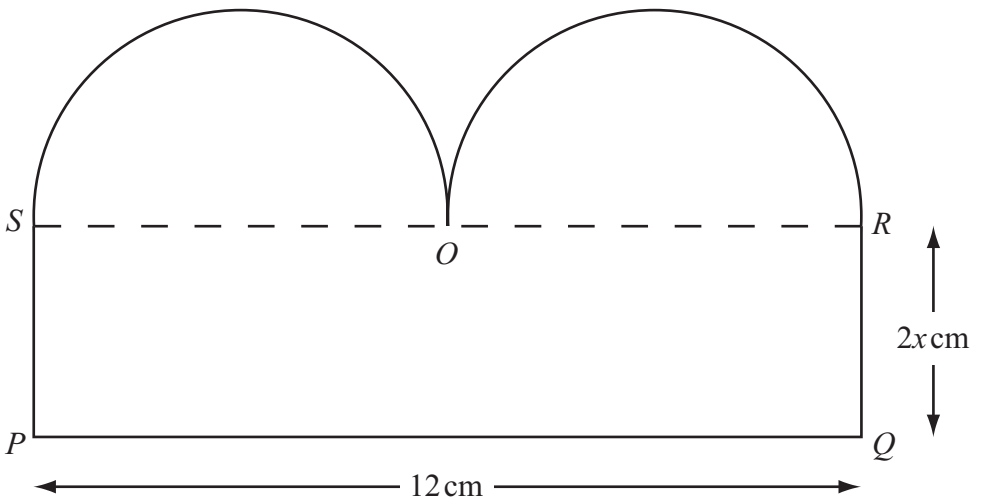

Figure 3

A template T consists of a uniform plane lamina $PQROS$, as shown in Figure 3. The lamina is bounded by two semicircles, with diameters SO and OR, and by the sides SP, PQ and QR of the rectangle $PQRS$. The point O is the mid-point of SR, $PQ = 12$ cm and $QR = 2x$ cm.

(a) Show that the centre of mass of T is a distance $\frac{4|2x^2 - 3|}{8x + 3\pi}$ cm from SR.

(7)

The template T is freely suspended from the point P and hangs in equilibrium.

Given that $x = 2$ and that θ is the angle that PQ makes with the horizontal,

(b) show that $\tan\theta = \frac{48 + 9\pi}{22 + 6\pi}$.

(4)

M 3 5 1 0 2 A 0 2 0 2 8

Leave blank

Question 7 continued

Leave blank

Question 7 continued

Leave blank

Question 7 continued

Q7

(Total 11 marks)

Leave blank

8. [*In this question* **i** *and* **j** *are unit vectors in a horizontal and upward vertical direction respectively*]

A particle P is projected from a fixed point O on horizontal ground with velocity $u(\mathbf{i} + c\mathbf{j})\,\mathrm{m\,s^{-1}}$, where c and u are positive constants. The particle moves freely under gravity until it strikes the ground at A, where it immediately comes to rest. Relative to O, the position vector of a point on the path of P is $(x\mathbf{i} + y\mathbf{j})\,\mathrm{m}$.

(a) Show that

$$y = cx - \frac{4.9x^2}{u^2}.$$

(5)

Given that $u = 7$, $OA = R\,\mathrm{m}$ and the maximum vertical height of P above the ground is $H\,\mathrm{m}$,

(b) using the result in part (a), or otherwise, find, in terms of c,

(i) R

(ii) H.

(6)

Given also that when P is at the point Q, the velocity of P is at right angles to its initial velocity,

(c) find, in terms of c, the value of x at Q.

(6)

Leave blank

Question 8 continued

Leave blank

Question 8 continued

Leave blank

Question 8 continued

Leave blank

Question 8 continued

Q8

(Total 17 marks)

TOTAL FOR PAPER: 75 MARKS

END