SUB-ZERO

DESIGN GUIDE

# WINE STORAGE

2/2021

## TABLE OF CONTENTS


3 WINE STORAGE

36 SUB-ZERO WARRANTIES


Features and specifications are subject to change at any time without notice.

Throughout this guide, dimensions may vary by ± 3 mm.

## Wine Storage

Wine finds a well-deserved place of honor in a Sub-Zero wine storage unit. Every detail is designed to ensure better wine preservation. Cherrywood-faced racks, soft lighting, custom cabinetry if desired—Sub-Zero helps make a wine collection an element of beauty in the home.

### WINE STORAGE MODELS

ICBDEU2450W

ICBUW-24

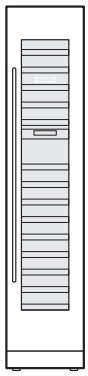

ICBIW-18

ICBIW-24

ICBIW-30

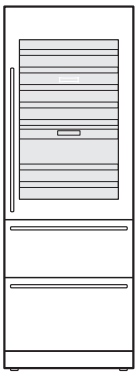

ICBIW-30R

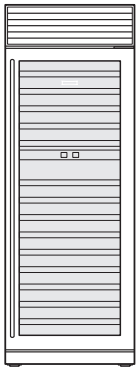

ICBBW-30

## Overall Dimensions

### MODEL ICBDEU2450W

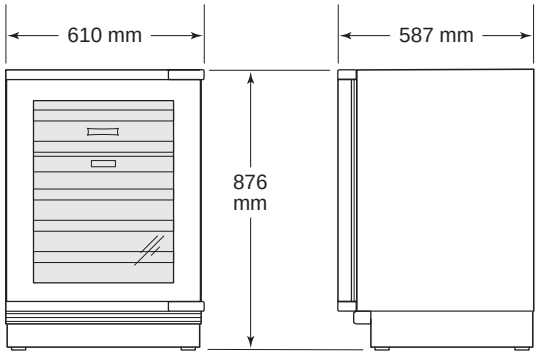


HEIGHT DIMENSIONS ± 13 mm

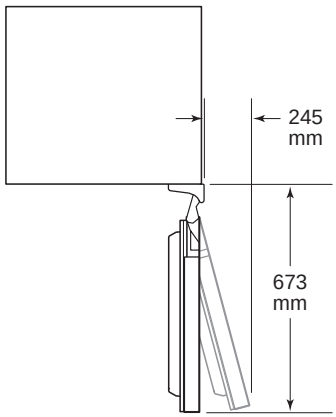


**IMPORTANT NOTE:** Overall dimensions do not include panels or handles. Dimensions will vary with panel thickness.

## Opening Dimensions

### MODEL ICBDEU2450W

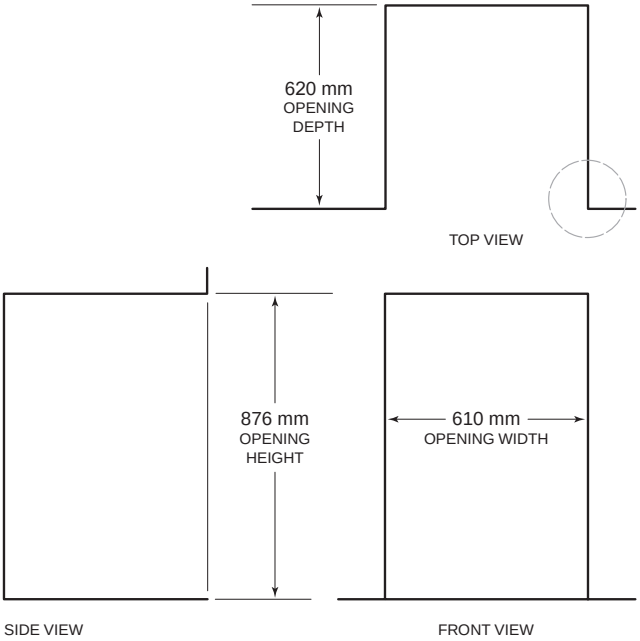


*NOTE: 89 mm finished returns will be visible and should be finished to match cabinetry.*

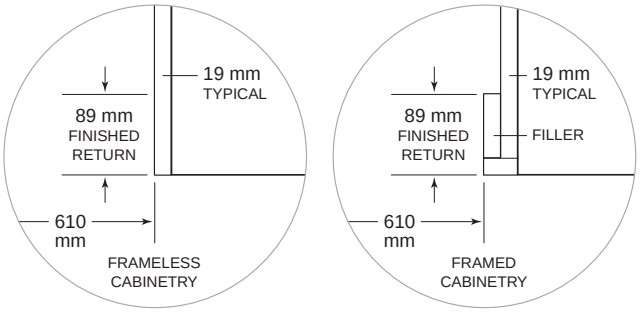


| DUAL OPENING WIDTH | W |
|---|---|
| Two 610 mm Models | 1222 mm |

*Dual installation kit required.*

## Custom Panels

For overlay, Designer series, and flush inset applications, custom door panels must be provided. Handle hardware must also be provided for overlay, Designer series, and flush inset applications. Refer to the panel requirements and custom panel dimensions charts for your specific model and design application.

Do not install a solid panel on a glass door unit. A solid door is available as a sales accessory (except model ICBBW-30) and must be installed if a solid panel is specified. Service may be required to install the door. Contact an authorized Sub-Zero dealer for more information. Dimensions are the same for glass door and solid door panels.

Finish all sides of the custom panels. They may be visible when the door is open or through the window of a glass door model.

## Custom Panel—ICBDEU2450W

For model ICBDEU2450W, the custom door panel will attach directly to the door frame with screws through a series of pre-drilled holes.

Refer to the charts below for panel requirements and dimensions.

### PANEL REQUIREMENTS

| | |
|---|---|
| Panel Weight | 10 kg max |
| Panel Thickness | 16 mm min – 19 mm max |

### TYPICAL PANEL DIMENSIONS

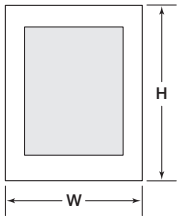


### PANEL DIMENSIONS

| MODEL | W | H |
|---|---|---|
| ICBDEU2450W | 604 mm | 772 mm |

| STILES / RAILS | MIN |
|---|---|
| Stiles | 83 mm |
| Top Rail | 89 mm |
| Bottom Rail | 114 mm |

## Custom Panel—DEU2450W

### TOE KICK CLEARANCE

The height of the toe kick area can extend beyond the typical toe kick height, provided it does not exceed the dimensions in the illustration below.

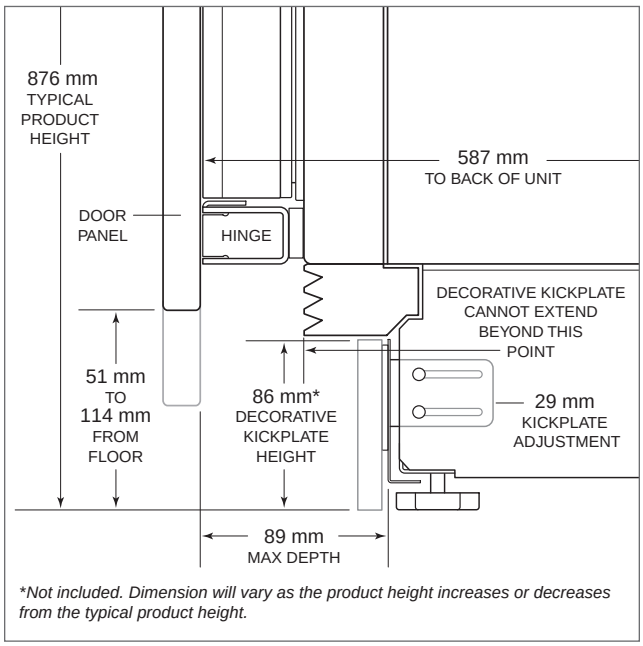


Toe kick clearance (side view)

### MAXIMUM DOOR OPENING

As the panel width and/or depth increases, so does the potential for panel interference. Interference may be minimized by using the 90° door stop.

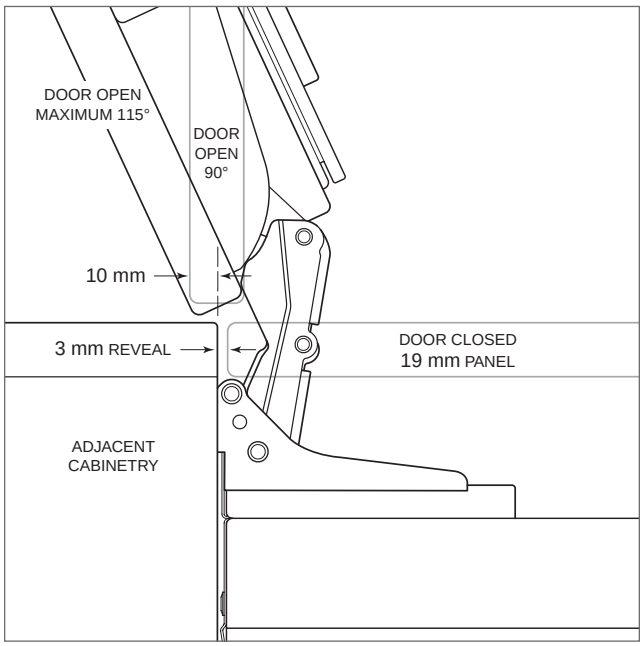


Maximum door opening (top view)

## Overall Dimensions

### MODEL ICBUW-24

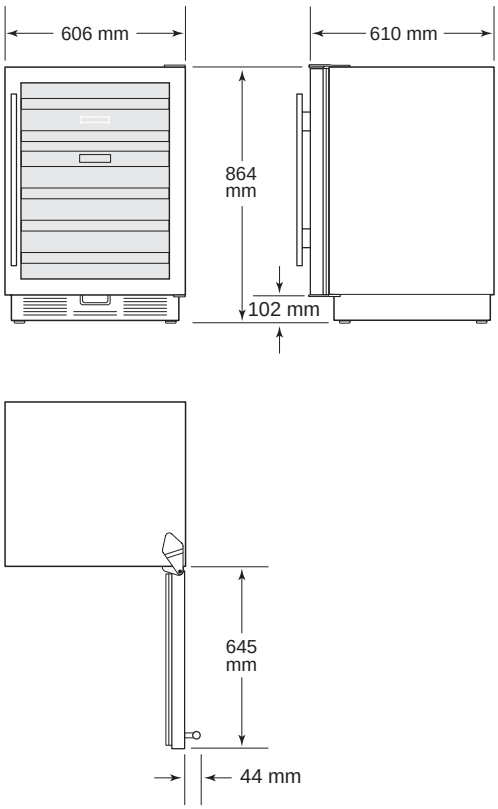


### MODEL ICBUW-24FS

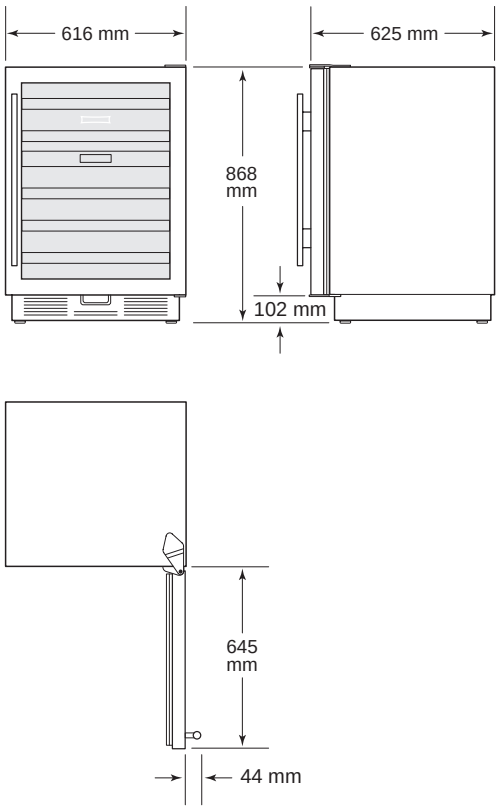


| STORAGE CAPACITY | BOTTLES (750 ML) |
|---|---|
| ICBUW-24 | 46 |
| ICBUW-24FS | 46 |

Freestanding model ICBUW-24FS has a finished stainless steel exterior and handles.

Overall dimensions for ICBUW-24 are based on the stainless steel model. Refer to page 7 for door clearance information.

## Opening Dimensions

### MODEL ICBUW-24

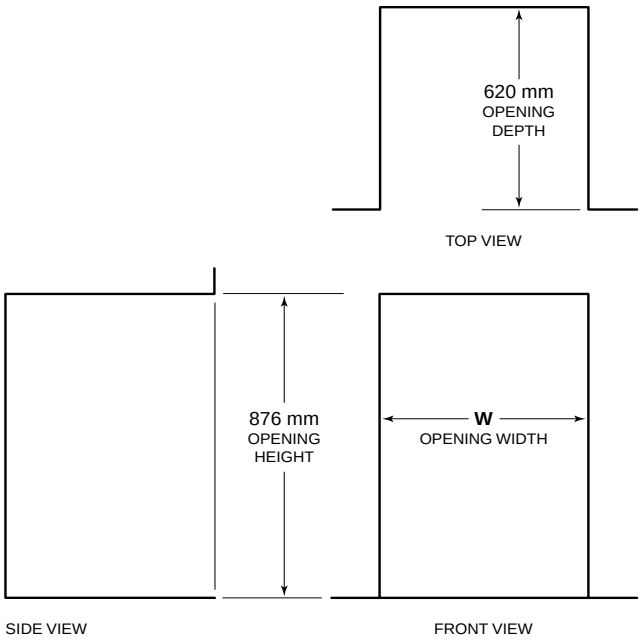


| OPENING WIDTH | W |
|---|---|
| ICBUW-24 | 610 mm |

| DUAL OPENING WIDTH | W |
|---|---|
| Two 610 mm Models | 1222 mm |

*Dual installation kit required.*

### DUAL INSTALLATION

If two units are installed side by side, a dual installation kit may be required. Installations without a custom filler strip require a dual installation kit. If a dual installation kit is not specified, a 51 mm filler strip is recommended between units. Dual installations without a filler strip can only be accomplished using two units with opposite hinges. Refer to the illustrations below.

Dual installation kits are available through an authorized Sub-Zero dealer.

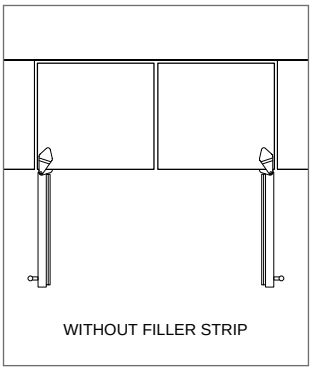


Opposite hinges.

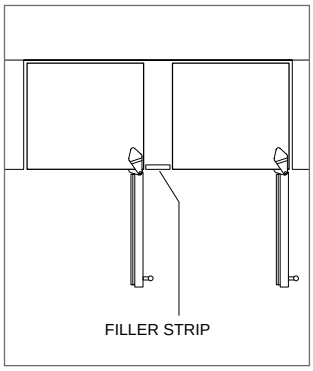


Same side hinges.

## Custom Panels

For overlay, integrated and flush inset applications, custom door panels must be provided. Handle hardware must also be provided for overlay, integrated and flush inset applications. Refer to panel requirements and custom panel dimensions charts for your specific model and design application.

Do not install a solid panel on a glass door unit. A solid door is available as a sales accessory (except model ICBBW-30) and must be installed if a solid panel is being specified. Service may be required to install the door. Contact an authorized Sub-Zero dealer for more information. Overall dimensions are the same for glass and solid door panels.

Finish all sides of the custom panels. They may be visible when the door is open or through the window of glass door models.

Model ICBUW-24FS has a finished stainless steel exterior that is designed to be used in a free-standing application.

## Custom Panels— ICBUW-24

For model ICBUW-24, the custom door panel will attach directly to the door frame with screws through a series of pre-drilled holes.

Refer to the charts for panel requirements and dimensions.

### PANEL REQUIREMENTS

| PANEL WEIGHT | MAX |
|---|---|
| ICB424G, ICBUW-24 | 5 kg |
| **PANEL THICKNESS** | **MIN** |
| ICB424G, ICBUW-24 | 16 mm |

### OVERLAY PANEL DIMENSIONS

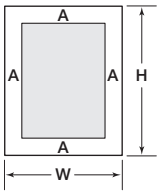


ICBUW-24

### PANEL DIMENSIONS

| MODEL | W | H |
|---|---|---|
| ICBUW-24 | 603 mm | 764 mm |
| **STILES \| RAILS** | | **A** |
| Minimum | | 57 mm |

### DOOR CLEARANCE

Model ICBUW-24 can be installed flush with surrounding cabinetry. Depending on the thickness of the overlay door panel, it may be necessary to install the unit 6 mm beyond the front surface of adjacent cabinetry to prevent interference when the door is opened to 145°. Refer to the full-scale template on page 7.

## Door Clearance—ICBUW-24

### FULL-SCALE TEMPLATE

To allow for a 145° door opening, the unit should extend a minimum of 6 mm beyond the front surface of adjacent cabinetry. The unit can be installed flush, however, there is potential for interference with the panel if the door is opened past 90°.

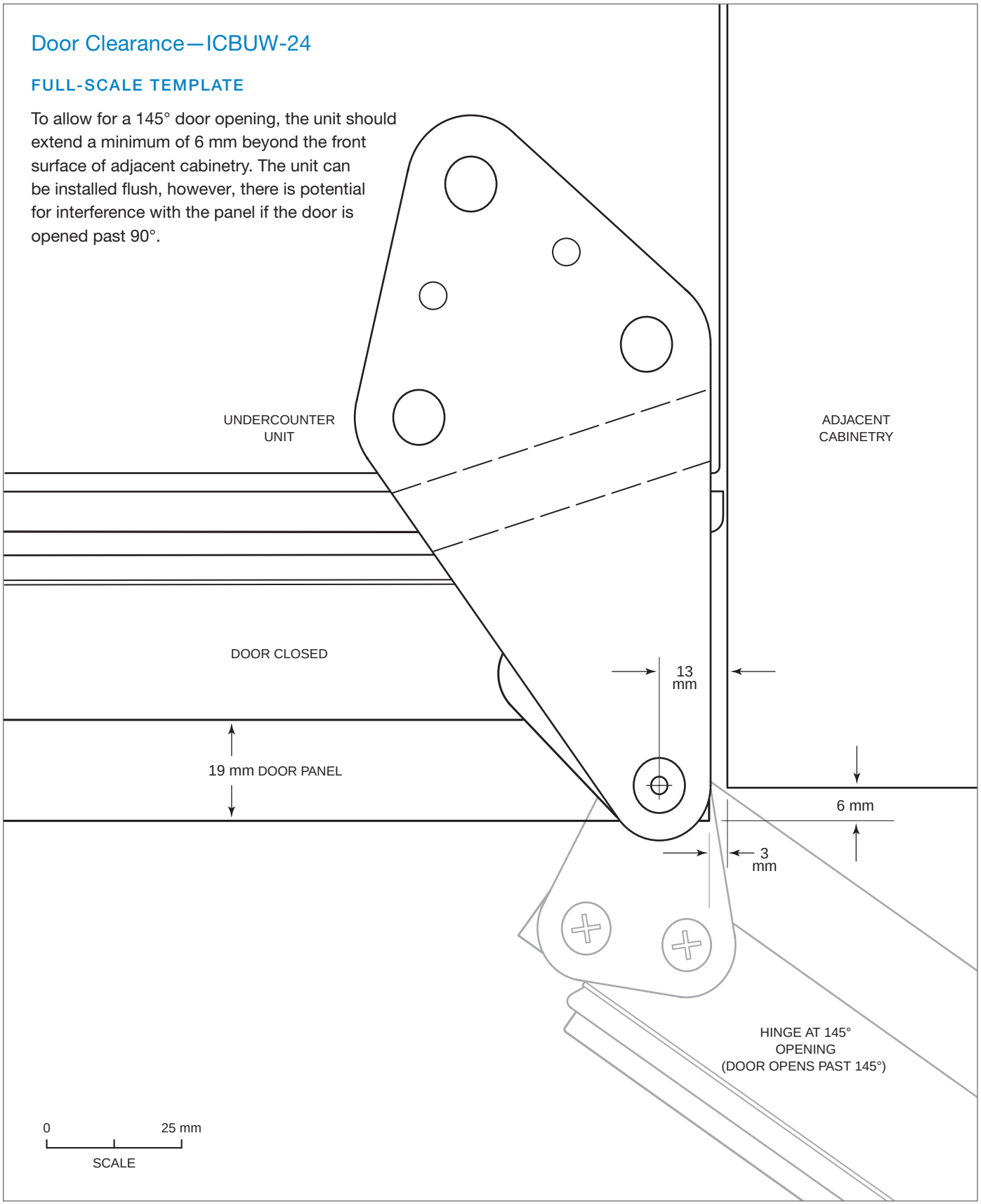


145° door opening (top view).

## Overall Dimensions

### COLUMN

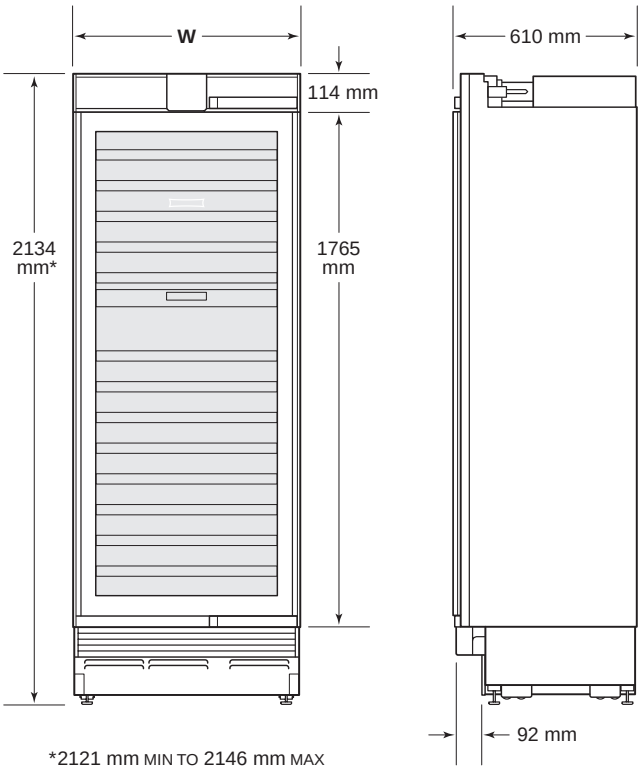


*2121 mm MIN TO 2146 mm MAX

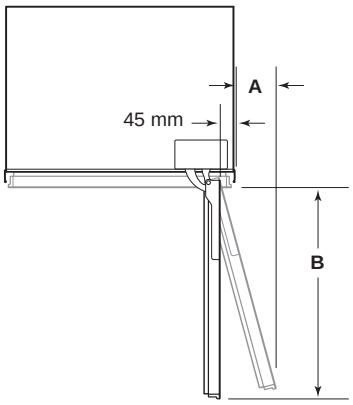


### TALL

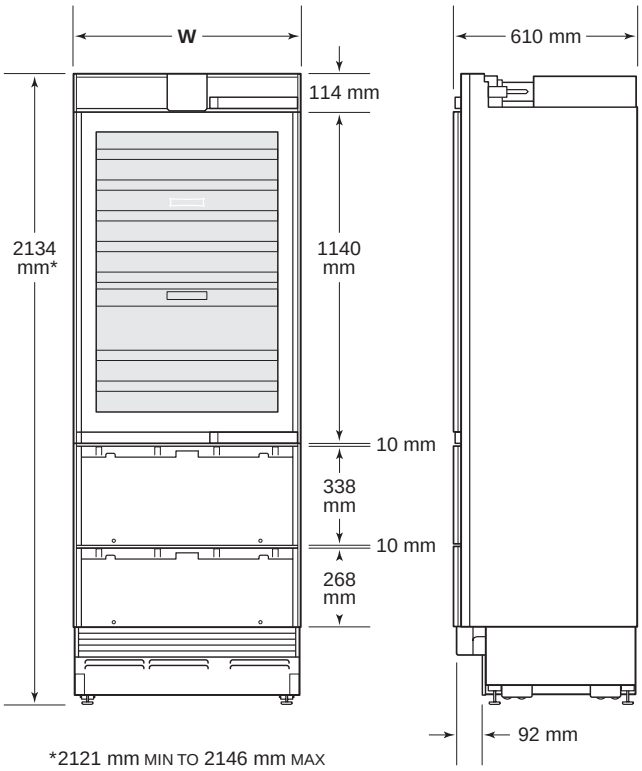


*2121 mm MIN TO 2146 mm MAX

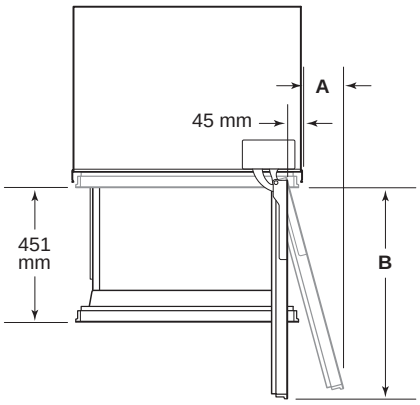


| COLUMN | W | A | B |
|---|---|---|---|
| ICBIW-18 | 457 mm | 64 mm | 419 mm |
| ICBIW-24 | 610 mm | 102 mm | 572 mm |
| ICBIW-30 | 762 mm | 143 mm | 724 mm |

| TALL | W | A | B |
|---|---|---|---|
| ICBIW-30R | 762 mm | 143 mm | 724 mm |

**IMPORTANT NOTE:** Overall dimensions do not include panels or handles. Dimensions will vary with panel thickness.

## Specifications

### INTERIOR CAPACITY

| COLUMN | | BOTTLES (750 ML) |
|---|---|---|
| ICBIW-18 | | 59 |
| ICBIW-24 | | 102 |
| ICBIW-30 | | 146 |
| **TALL** | **R (L)** | **BOTTLES (750 ML)** |
| ICBIW-30R | 113 | 86 |

# Opening Dimensions

## INTEGRATED WINE STORAGE

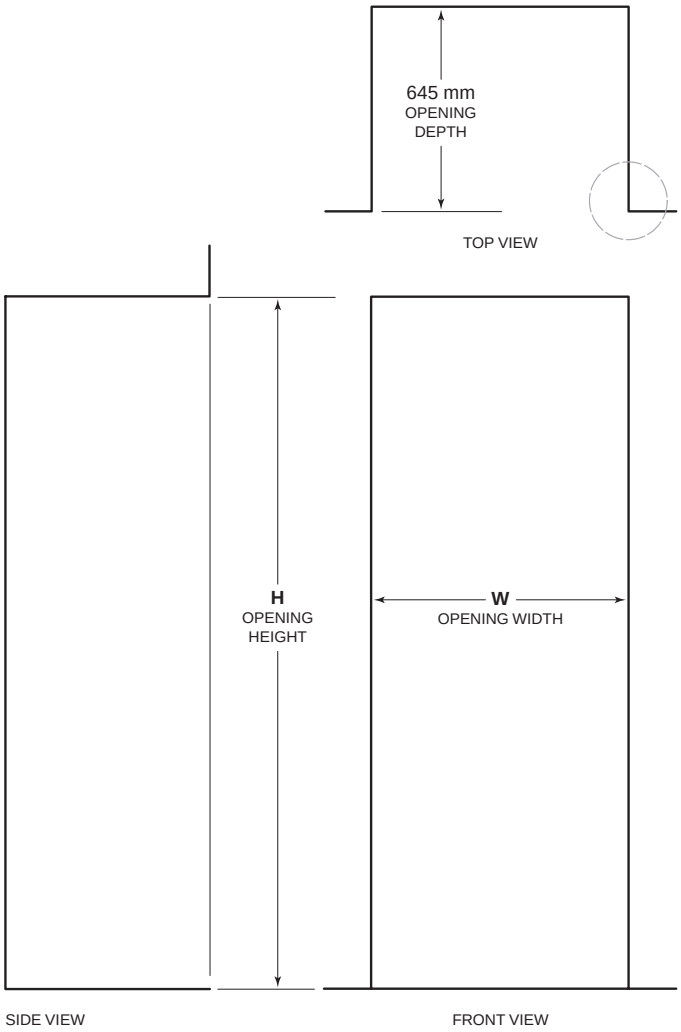


*NOTE: 89 mm finished returns will be visible and should be finished to match cabinetry.*

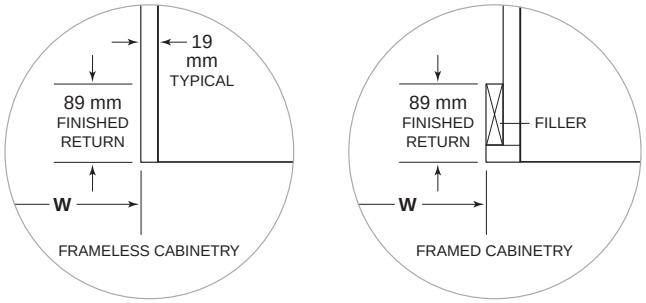


### OPENING DIMENSIONS

| COLUMN | W* | H |
|---|---|---|
| ICBIW-18 | 457 mm | 2134 mm |
| ICBIW-24 | 610 mm | 2134 mm |
| ICBIW-30 | 762 mm | 2134 mm |
| **TALL** | **W*** | **H** |
| ICBIW-30R | 762 mm | 2134 mm |

**For stainless steel side panel accessory, add 25 mm per panel to opening width.*

The depth of each integrated (ICBIW) model is 610 mm. Allow for panel thickness when planning the finished opening depth. A minimum 89 mm finished return is required on all sides of the opening. Framed cabinets will require additional finished filler material behind the face frame for a proper installation. Refer to the illustration.

### DUAL INSTALLATION

The unit can be installed next to an integrated refrigeration model or another integrated wine storage model in a dual installation. When installing two units side by side, the opening width is the width of the two units added together. A dual installation kit will be required for this installation. If a dual installation kit is not specified, a minimum 51 mm filler strip is required between units.

Dual installation kits are available through an authorized Sub-Zero dealer. For questions regarding the installation, contact your authorized Sub-Zero dealer.

## Custom Panels—Integrated Models

For integrated (ICBIW) models, custom door panels and handle hardware must be provided. Refer to the panel requirements chart and typical panel dimensions.

Do not install a solid panel on the glass door unit. A solid door is available as a sales accessory through an authorized Sub-Zero dealer.

The thickness of the custom panel can vary. A minimum 16 mm thick panel is required, but the thickness can be increased provided it does not exceed the weight limit. The depth of each integrated model is 610 mm. Allow for panel thickness when planning the finished opening depth. Refer to the full-scale template on page 13.

**⚠ CAUTION**

**As reveals between cabinetry and the unit decrease, severe finger pinching can occur while door is closing.**

Finish all sides of custom panels. They will be visible when the door/drawer is open.

D-style handles are recommended. Door handles must be located near the edge of the panel opposite the hinge and should be centered top to bottom. Drawer handles must be located near the top edge of each panel. Stainless steel tubular and pro handles are available through an authorized Sub-Zero dealer.

### PANEL REQUIREMENTS

| STILES \| RAILS | WIDTH |
|---|---|
| Stiles | 83 mm |
| Top Rail | 197 mm |
| Bottom Rail | 241 mm |
| Bottom Rail (ICBIW-30R) | 114 mm |
| **PANEL WEIGHT** | **MAX** |
| Door Frame | 16 kg |
| Door Frame (ICBIW-30R) | 11 kg |
| Drawer Panel | 7 kg |
| **PANEL THICKNESS** | **MIN** |
| All Panels | 16 mm |

### TYPICAL PANEL DIMENSIONS

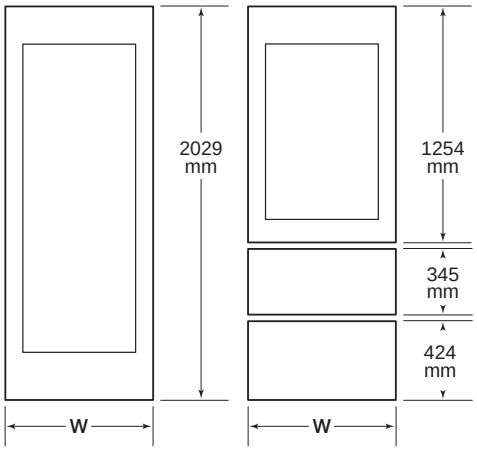


Column Tall

Typical panel dimensions are based on a 2134 mm finished height, 102 mm toe kick and 3 mm reveals. Panel dimensions must be adjusted accordingly for all other installations. Refer to the illustration for panel heights and the chart below for panel widths.

| PANEL WIDTH | W |
|---|---|
| ICBIW-18 | 451 mm |
| ICBIW-24 | 604 mm |
| ICBIW-30, ICBIW-30R | 756 mm |

### DUAL INSTALLATION

For dual installations, refer to the illustration for panel heights and the chart below for panel widths.

| PANEL WIDTH—DUAL INSTALLATION | W |
|---|---|
| ICBIW-18 | 452.5 mm |
| ICBIW-24 | 605.5 mm |
| ICBIW-30, ICBIW-30R | 757.5 mm |

## Custom Panels—Integrated Models

### DOOR PANEL HEIGHT

The height of the custom door panel can extend beyond the typical panel height, provided it does not exceed the weight limit. Refer to the illustration below.

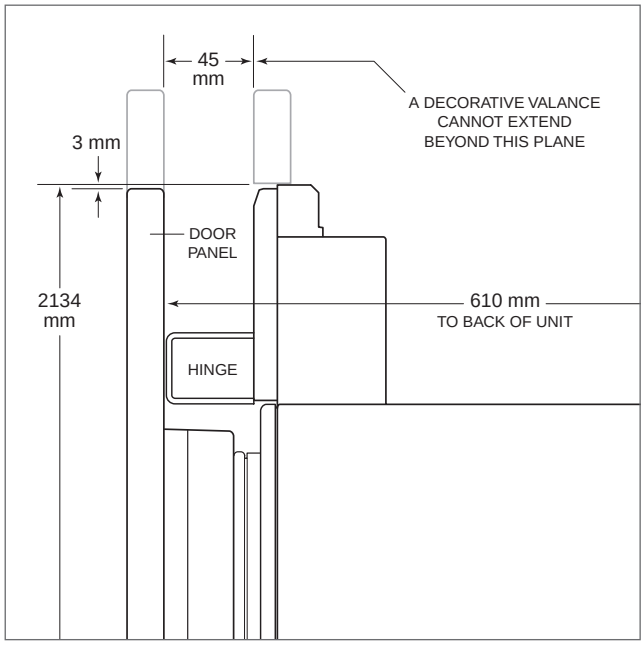


Upper valance—column and tall (side view).

### TOE KICK CLEARANCE

The height of the toe kick area can extend beyond the typical toe kick height, provided it does not exceed the dimensions in the illustration below. Toe kick heights from 50 mm to 98 mm require a reduced toe kick accessory available through an authorized Sub-Zero dealer.

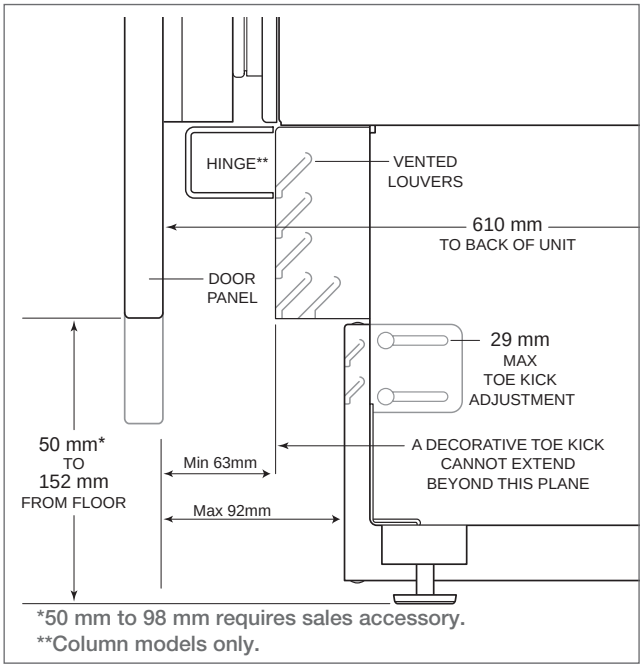


Toe kick (side view).

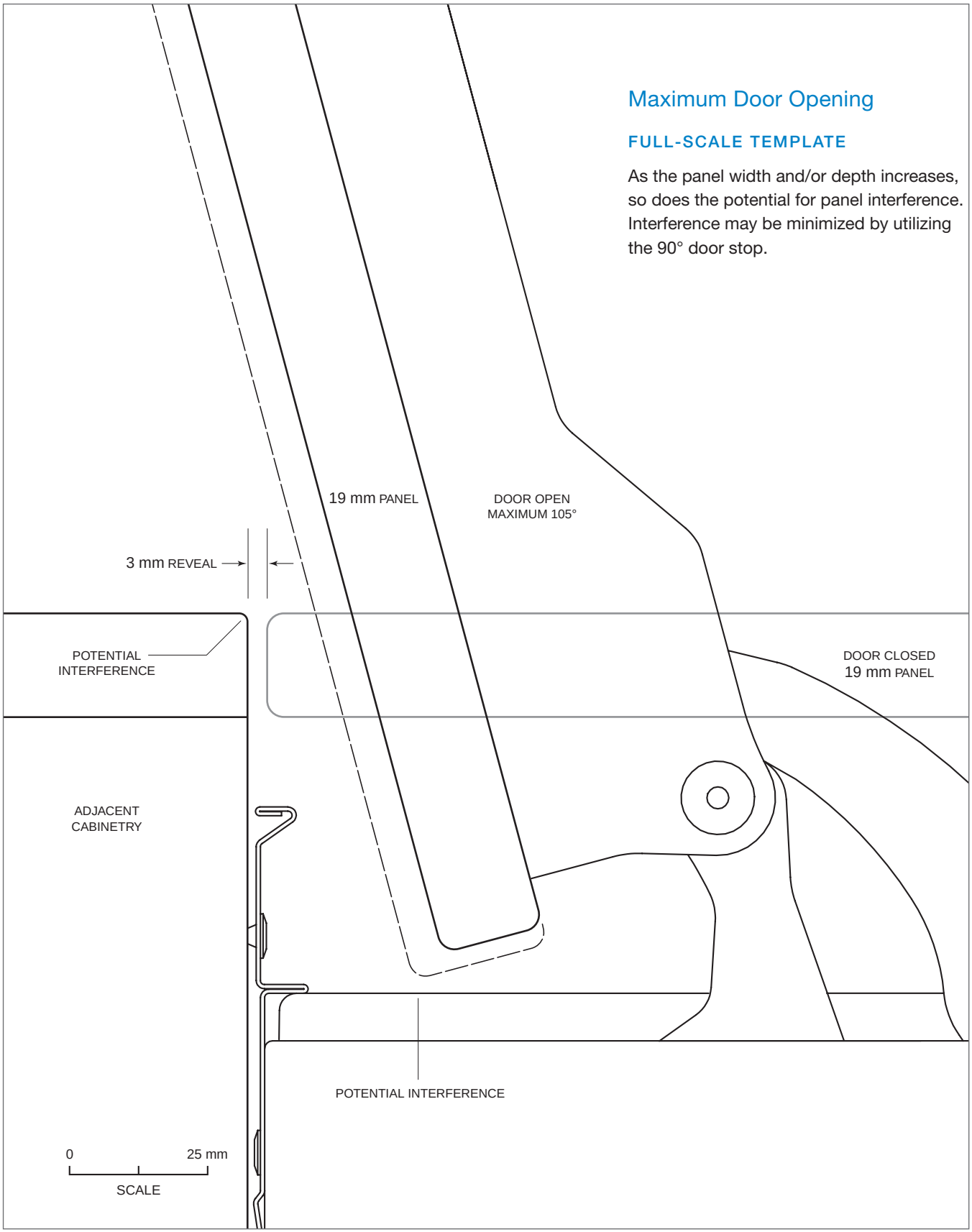


Maximum door opening (top view).

## Overall Dimensions

### MODEL ICBWS-30 | ICBBW-30

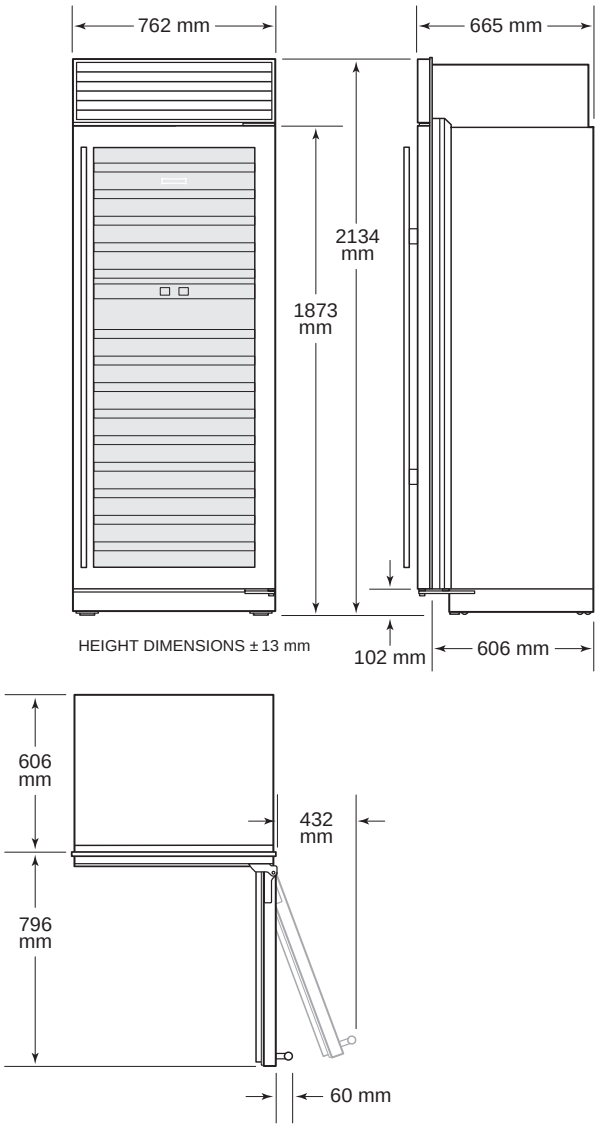


| STORAGE CAPACITY | BOTTLES (750 ML) |
|---|---|
| ICBWS-30 | 147 |
| ICBBW-30 | 146 |

Overall dimensions are based on the stainless steel model. For flush inset applications, add 13 mm to door clearance dimensions.

## Opening Dimensions

### ICBWS-30 | ICBBW-30 STANDARD INSTALLATION

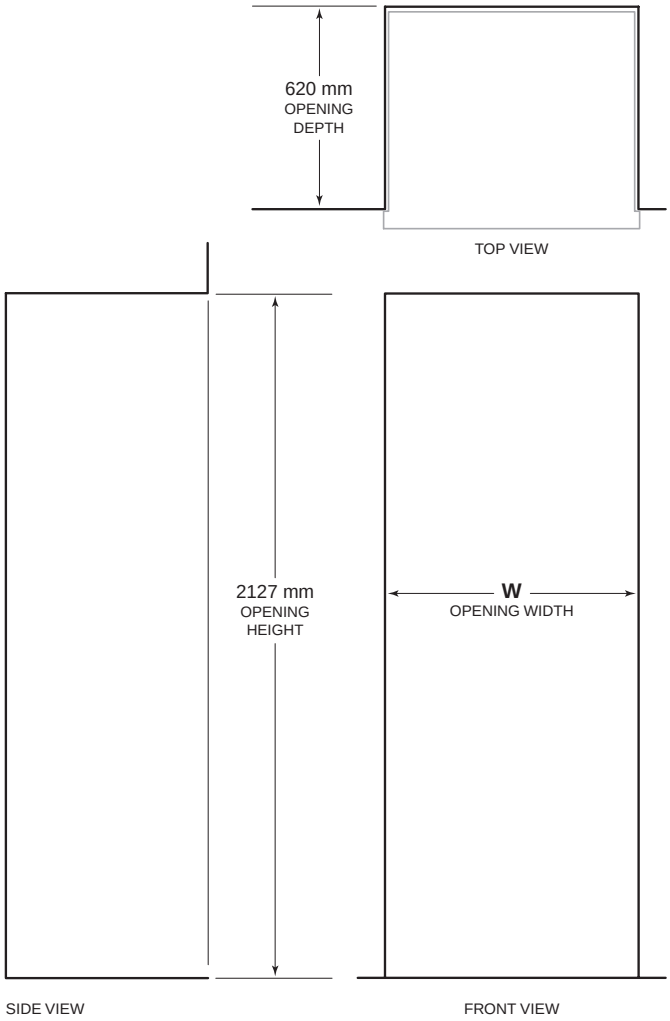


*NOTE: Shaded line represents profile of unit.*

| OPENING WIDTH | W |
|---|---|
| ICBWS-30 | 749 mm |
| ICBBW-30 | 749 mm |

If a 2108 mm grille height is specified, the opening height must be decreased by 22 mm. If a 2235 mm grille height is specified, the opening height must be increased by 102 mm.

If two units are installed side by side, refer to page 15 for dual standard installations.

## Opening Dimensions

### ICBWS-30 | ICBBW-30 DUAL STANDARD INSTALLATION

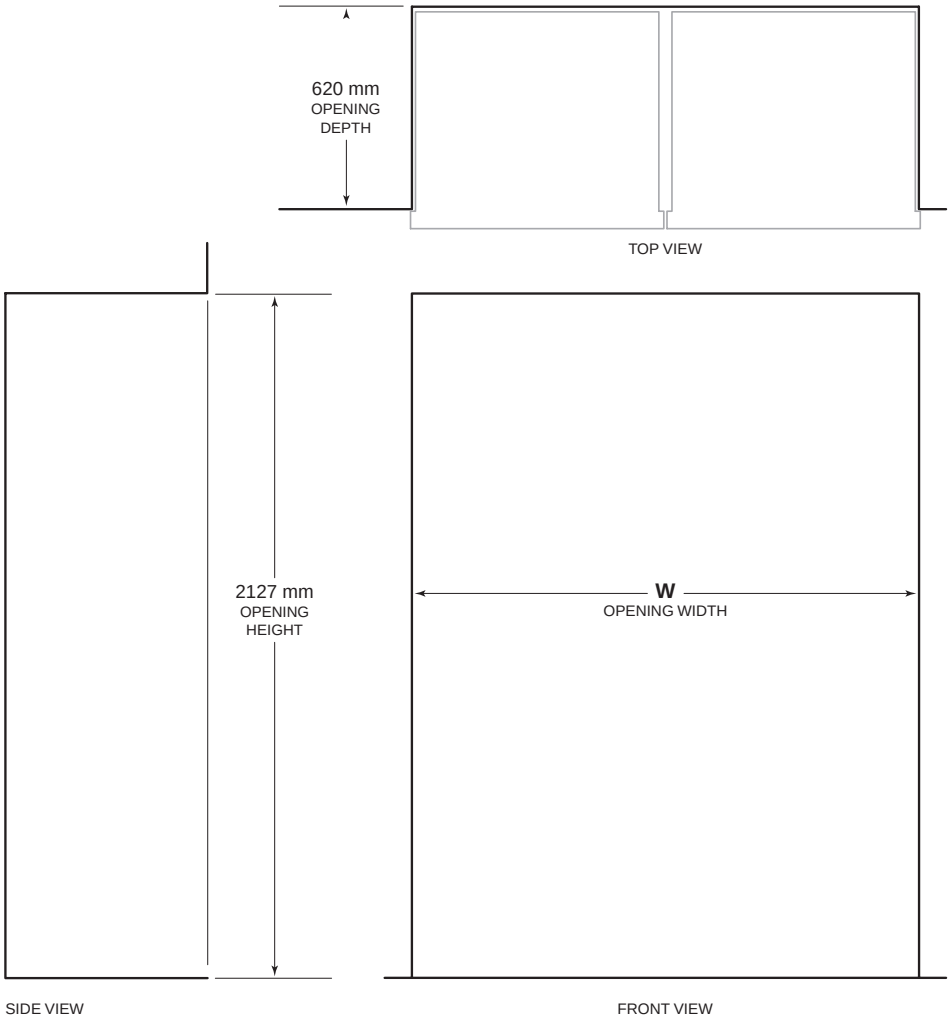


*NOTE: Shaded line represents profile of unit.*

| OPENING WIDTH | W |
|---|---|
| ICBWS-30 and 762 mm Built-In | 1518 mm |
| ICBBW-30 and 762 mm Built-In | 1518 mm |
| ICBWS-30 and 914 mm Built-In | 1670 mm |
| ICBBW-30 and 914 mm Built-In | 1670 mm |

A dual installation kit will be required for this installation.

## Opening Dimensions

### ICBWS-30 | ICBBW-30 FLUSH INSET INSTALLATION

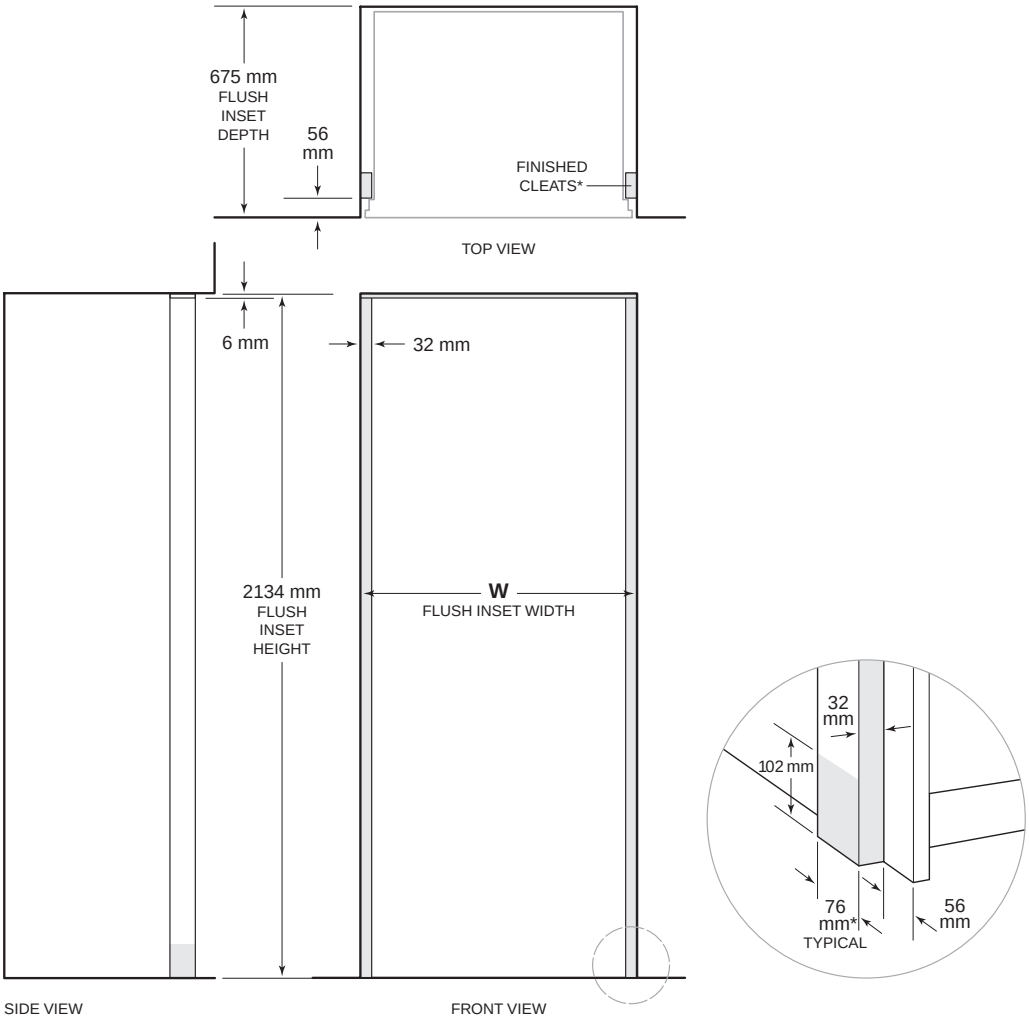


**76 mm typical depth. Shaded areas will be visible and should be finished to match cabinetry.*

*NOTE: Shaded line represents profile of unit with 19 mm panel.*

| FLUSH INSET WIDTH | W |
|---|---|
| ICBWS-30 | 813 mm |
| ICBBW-30 | 813 mm |

Dimensions assume a 19 mm panel thickness.

If two units are installed side by side, refer to page 20 for dual flush inset installations.

## Electrical

International models from the factory require a 220-240 V AC, 50/60 Hz electrical supply, fused at the correct rating for the unit.

The electrical supply should be either in the cabinet above the refrigerator a MINIMUM OF 2200MM ABOVE THE FLOOR or in the cabinet alongside.

| ELECTRICAL REQUIREMENTS | |
|---|---|
| Power Supply | 220-240 V AC, 50/60 Hz |
| Circuit Breaker | 10 amp |
| Receptacle | grounding-type (earthed) |

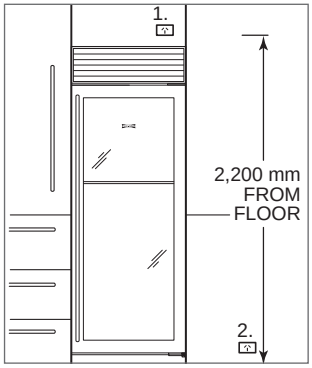


Built in Tall Models. Alternative location of power and water supply depending on ease of access.

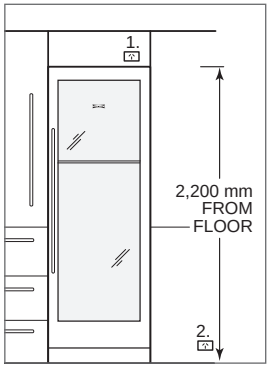


Integrated Tall Models. Alternative location of power and water supply depending on ease of access.

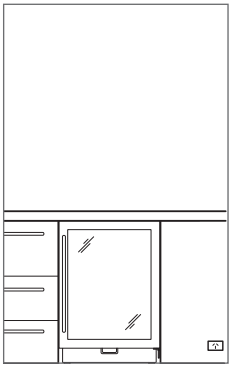

Under Bench Model. Location of power.

## Custom Panels—ICBWS-30 | ICBBW-30

### FLUSH INSET PANELS

The flush inset application is an overlay model with flush inset panels. It is not a separate model.

The flush inset design allows custom panels to be installed flush with adjacent cabinets. Similar to overlay, flush inset panels are typically created by combining a 19 mm custom panel, a 3 mm spacer panel and a 6 mm backer panel. Refer to the illustrations for overlay panels on the previous page.

For flush inset panels thicker than 19 mm, a 90° door stop may be required to prevent interference with adjacent cabinets. Refer to the full-scale template on page 28.

### PANEL REQUIREMENTS

| PANEL WEIGHT | MAX |
|---|---|
| Door | 34 kg |
| Grille | 6 kg |
| **PANEL THICKNESS** | **MIN** |
| Flush Inset | 16 mm |

### FLUSH INSET PANEL DIMENSIONS

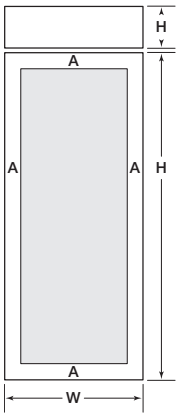


ICBWS-30, ICBBW-30

### FLUSH INSET PANELS

| DOOR | W | H |
|---|---|---|
| Flush Inset Panel | 787 mm | 1772 mm |
| Spacer Panel | 740 mm | 1751 mm |
| Backer Panel | 756 mm | 1767 mm |
| **STILES \| RAILS** | | **A** |
| Minimum | | 95 mm |
| **GRILLE** | **W** | **H** |
| Flush Inset Panel | 787 mm | 235 mm |
| Spacer Panel | 740 mm | 211 mm |
| Backer Panel | 756 mm | 227 mm |

*Grille panel dimensions are for standard 2134 mm overall unit height.*

## Custom Panels—ICBWS-30 | ICBBW-30

### FLUSH INSET PANEL OFFSET

The illustrations provide panel offsets and reveals for model ICBWS-30 or ICBBW-30 in a flush inset application. Refer to the chart below for reference to the illustrations.

| PANEL OFFSET | ILLUS |
|---|---|
| Door \| Grille Sides | A |
| Grille Top | B |
| Grille Bottom \| Door Top | C |
| Door Bottom | D |

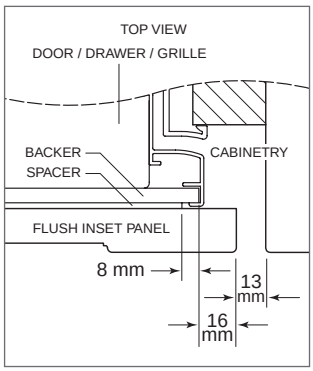


Illus. A

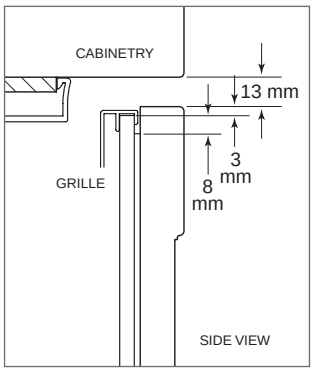


Illus. B

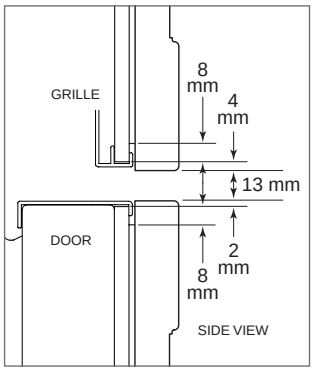


Illus. C

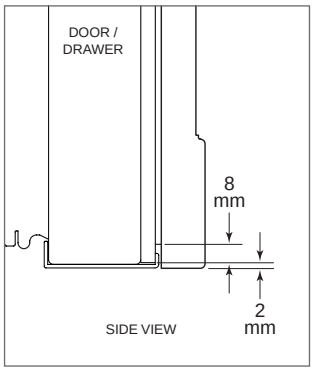


Illus. D

## Opening Dimensions

### ICBWS-30 | ICBBW-30 DUAL FLUSH INSET INSTALLATION

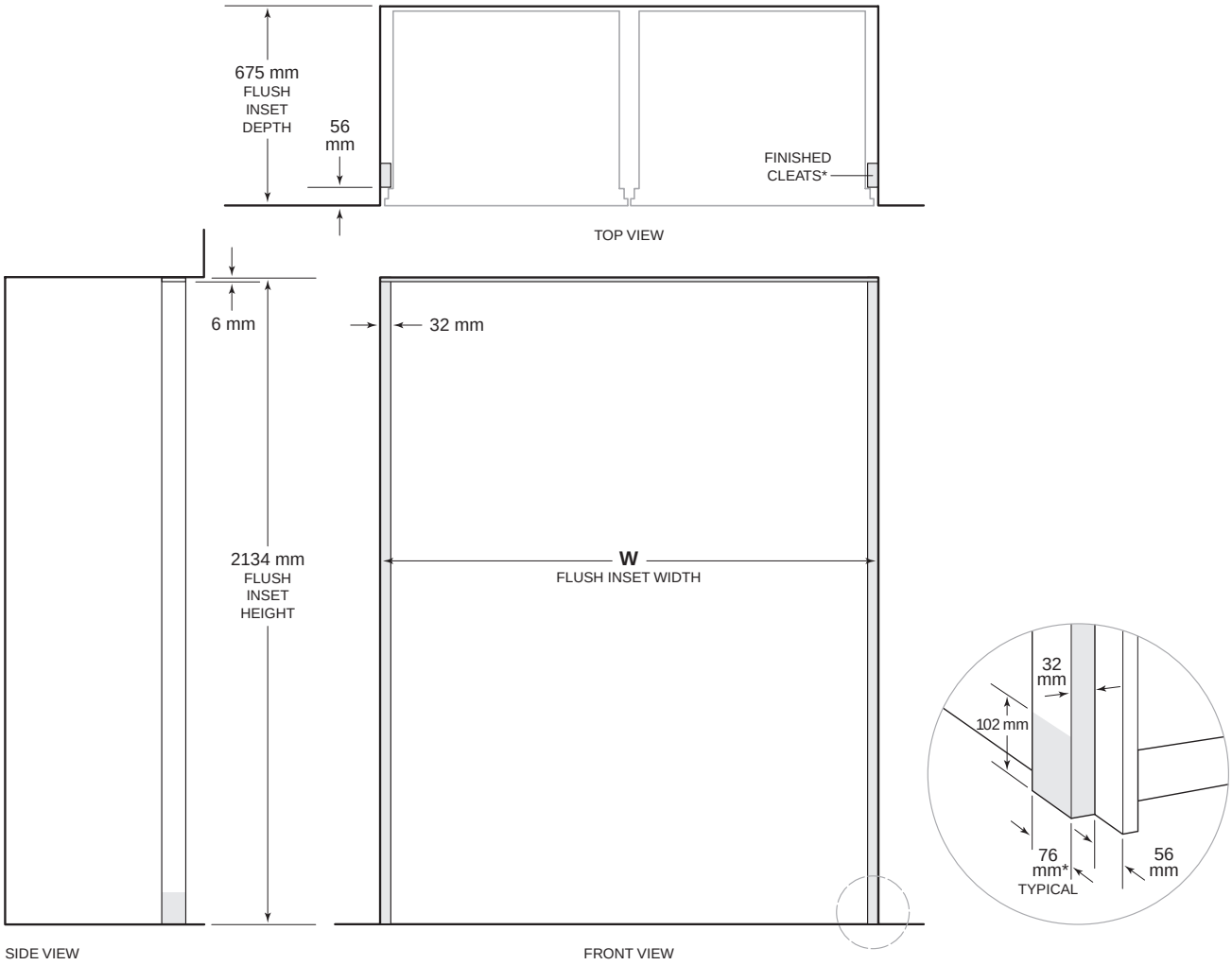


**76 mm typical depth. Shaded areas will be visible and should be finished to match cabinetry.*

*NOTE: Shaded line represents profile of unit with 19 mm panel.*

| FLUSH INSET WIDTH | W |
|---|---|
| ICBWS-30 and 762 mm Built-In | 1581 mm |
| ICBBW-30 and 762 mm Built-In | 1581 mm |
| ICBWS-30 and 914 mm Built-In | 1734 mm |
| ICBBW-30 and 914 mm Built-In | 1734 mm |

Dimensions assume a 19 mm panel thickness. A dual installation kit will be required for this installation.

## Custom Panels—ICBWS-30 | ICBBW-30

### DUAL INSTALLATIONS

A dual installation kit may be required if two models ICBWS-30 or a model ICBWS-30 and built-in unit are installed side by side, or two models ICBBW-30 or a model ICBBW-30 and built-in unit. Installations without a custom filler strip require a dual installation kit. If a dual installation kit is not specified, a 51 mm filler strip is recommended between units. Dual installations without a filler strip can only be accomplished using two units with opposite hinges. Refer to the illustrations below.

Dual installation kits are available through an authorized Sub-Zero dealer. For questions regarding the installation, contact your authorized Sub-Zero dealer.

For dual standard installations, panel dimensions are the same as for single installations. Panel dimensions and offsets for dual flush inset installations are listed on the following pages.

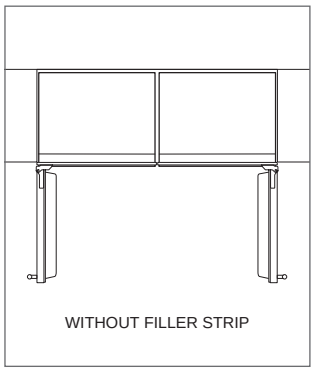


Opposite hinges.

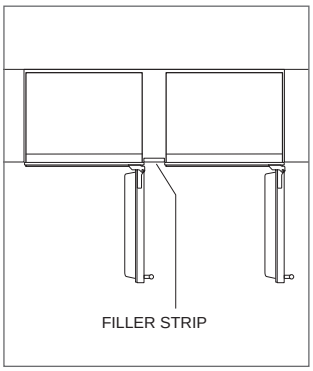


Same side hinges.

### DUAL FLUSH INSET PANEL DIMENSIONS

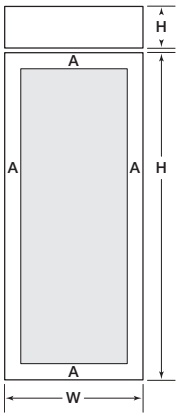


ICBWS-30, ICBBW-30

### DUAL FLUSH INSET PANELS

| DOOR | W | H |
|---|---|---|
| Flush Inset Panel | 775 mm | 1772 mm |
| Spacer Panel | 740 mm | 1751 mm |
| Backer Panel | 756 mm | 1767 mm |
| **STILES \| RAILS** | | **A** |
| Minimum | | 95 mm |
| **GRILLE** | **W** | **H** |
| Flush Inset Panel | 775 mm | 235 mm |
| Spacer Panel | 740 mm | 211 mm |
| Backer Panel | 756 mm | 227 mm |

*Grille panel dimensions are for standard 2134 mm overall unit height.*

## Custom Panels—ICBWS-30 | ICBBW-30

### DUAL FLUSH INSET PANEL OFFSET

The illustrations provide panel offsets and reveals for model ICBWS-30 or ICBBW-30 in a dual flush inset application. Refer to the chart below for reference to the illustrations.

| PANEL OFFSET | ILLUS |
|---|---|
| Door (hinge) \| Grille Sides | A |
| Door (handle) Sides | B |
| Grille Top | C |
| Grille Bottom \| Door Top | D |
| Door Bottom | E |

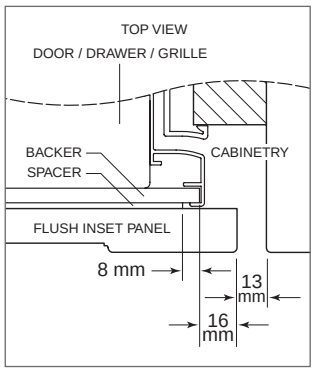


Illus. A

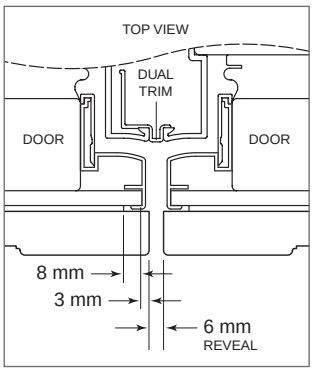


Illus. B

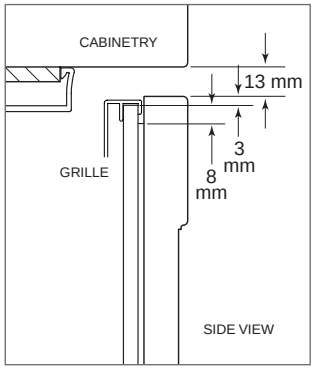


Illus. C

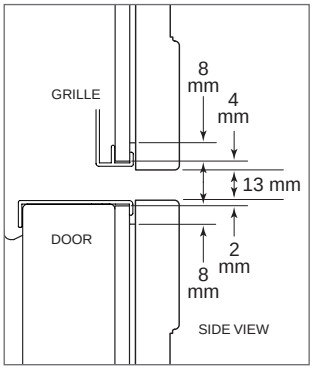


Illus. D

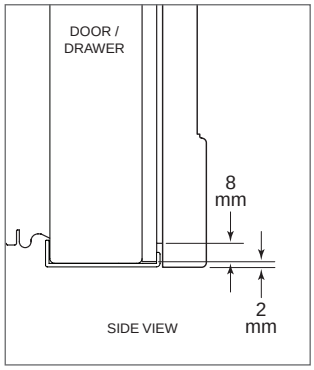


Illus. E

## Dual Flush Inset Panel Dimensions

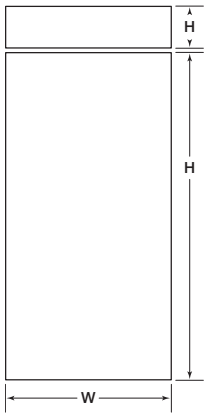


ICBBI-36R, ICBBI-36F

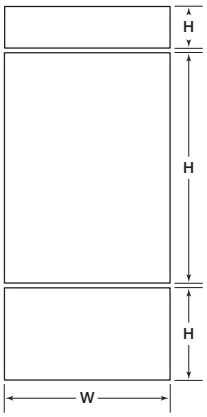


ICBBI-36UID

### MODEL ICBBI-36R, ICBBI-36F

| REFRIGERATOR \| FREEZER | W | H |
|---|---|---|
| Flush Inset Panel | 927 mm | 1772 mm |
| Spacer Panel | 892 mm | 1751 mm |
| Backer Panel | 908 mm | 1767 mm |
| **GRILLE** | **W** | **H** |
| Flush Inset Panel | 927 mm | 235 mm |
| Spacer Panel | 892 mm | 211 mm |
| Backer Panel | 908 mm | 227 mm |

### MODEL ICBBI-36UID

| REFRIGERATOR | W | H |
|---|---|---|
| Flush Inset Panel | 927 mm | 1273 mm |
| Spacer Panel | 892 mm | 1253 mm |
| Backer Panel | 908 mm | 1268 mm |
| **FREEZER** | **W** | **H** |
| Flush Inset Panel | 927 mm | 483 mm |
| Spacer Panel | 892 mm | 459 mm |
| Backer Panel | 908 mm | 475 mm |
| **GRILLE** | **W** | **H** |
| Flush Inset Panel | 927 mm | 235 mm |
| Spacer Panel | 892 mm | 211 mm |
| Backer Panel | 908 mm | 227 mm |

*Grille panel dimensions are for standard 2134 mm overall unit height.*

## Dual Installation Kit

### INSTALLATION WITH DUAL WIDE GRILLE

This kit will replace the existing grilles that ship with the units and span the entire width of both units. The kit includes a 6 mm center trim strip (required for proper installation of the dual wide grille), heater, dual kickplate and mounting hardware. Dual wide grilles are available for all built-in models and design applications. The overlay dual installation kit with grille will accept overlay and dual flush inset panels. For dual wide grille panel dimensions, refer to the panel specifications below for your design application. Grille panel dimensions listed are for a standard 2134 mm finished height.

| Dual Wide Grille—Flush Inset | | |
|---|---|---|
| **TWO 762 mm MODELS** | **W** | **H** |
| Flush Inset Panel | 1556 mm | 235 mm |
| Spacer Panel | 1508 mm | 211 mm |
| Backer Panel | 1524 mm | 227 mm |
| **762 mm AND 914 mm MODELS** | **W** | **H** |
| Flush Inset Panel | 1708 mm | 235 mm |
| Spacer Panel | 1661 mm | 211 mm |
| Backer Panel | 1676 mm | 227 mm |
| **TWO 914 mm MODELS** | **W** | **H** |
| Flush Inset Panel | 1861 mm | 235 mm |
| Spacer Panel | 1813 mm | 211 mm |
| Backer Panel | 1829 mm | 227 mm |

## Dual Installation

### DUAL FLUSH INSET PANEL OFFSET

The illustrations provide panel offsets and reveals for built-in models in a dual flush inset application. Refer to the chart below for reference to the illustrations.

#### PANEL OFFSET

| ALL REFRIGERATOR \| ALL FREEZER | ILLUS |
|---|---|
| Door (hinge) \| Grille Sides | A |
| Door (handle) Sides | B |
| Grille Top | C |
| Grille Bottom \| Door Top | D |
| Door Bottom | F |

| OVER-AND-UNDER | ILLUS |
|---|---|
| Door (hinge) \| Drawer \| Grille Sides | A |
| Door (handle) Sides | B |
| Grille Top | C |
| Grille Bottom \| Door Top | D |
| Door Bottom \| Drawer Top | E |
| Drawer Bottom | F |

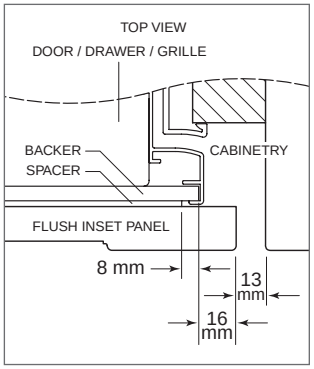


Illus. A

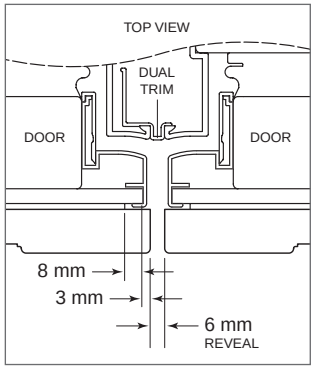


Illus. B

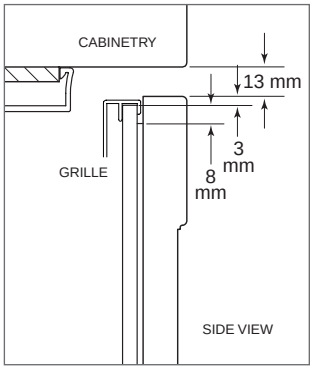


Illus. C

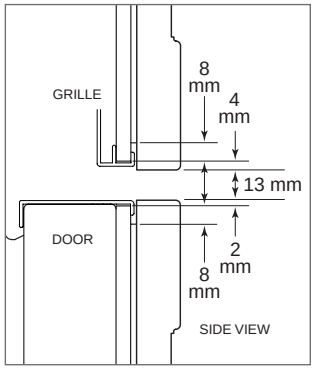


Illus. D

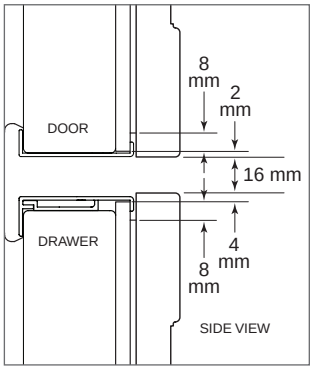


Illus. E

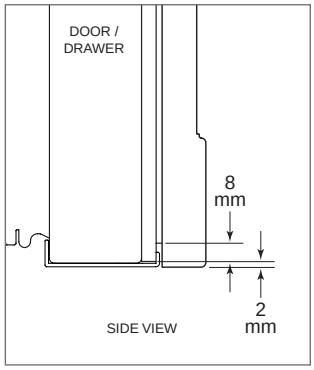


Illus. F

## Custom Panels—ICBWS-30 | ICBBW-30

### SIDE PANEL

The custom side panel must be a minimum of 610 mm deep and 13 mm thick. Routing will be necessary for the side panel to fit flush against the side of the unit. Refer to the illustrations below.

When installing model ICBWS-30 or ICBBW-30 with a custom side panel, an accessory kit is required. Stainless steel and white enamel side panels are available through an authorized Sub-Zero dealer.

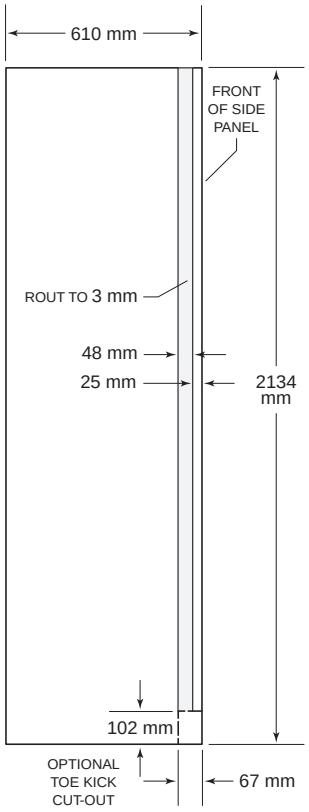


Side panel dimensions.

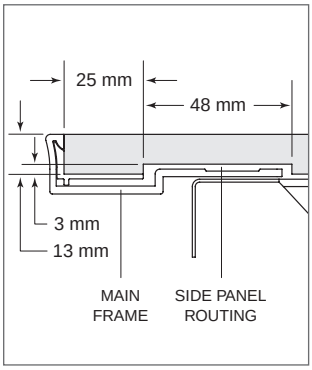


Routing detail.

## Standard Handles

Optional stainless steel tubular and pro handles are available through an authorized Sub-Zero dealer.

Refer to the chart below for standard handle lengths for wine storage models.

| HANDLE LENGTH | TUBULAR | PRO |
|---|---|---|
| ICB424G Door | 616 mm | 572 mm |
| ICBUW-24 Door | 616 mm | 572 mm |
| ICBIW-18 Door | 1273 mm | 1229 mm |
| ICBIW-24 Door | 1273 mm | 1229 mm |
| ICBIW-30 Door | 1273 mm | 1229 mm |
| ICBIW-30R Door | 845 mm | 800 mm |
| ICBIW-30R Drawer | 616 mm | 572 mm |
| ICBWS-30 Door | 1622 mm | 1147 mm |
| ICBBW-30 Door | 1622 mm | 1147 mm |

## Wine Rack Wood Facing

### FULL-SCALE TEMPLATE

The natural cherrywood facing on wine storage racks can be stained and sealed, or replaced with wood more complementary to surrounding cabinetry. Refer to the full-scale template below for profile dimensions of the wood facing and the chart for width.

| WOOD FACING WIDTH | WIDTH |
|---|---|
| ICB424G, ICBUW-24 | 495 mm |
| ICB424FSG, ICBUW-24FS | 495 mm |
| ICBIW-18 | 295 mm |
| ICBIW-24 | 448 mm |
| ICBIW-30, ICBIW-30R | 600 mm |
| ICBWS-30, ICBBW-30 | 624 mm |

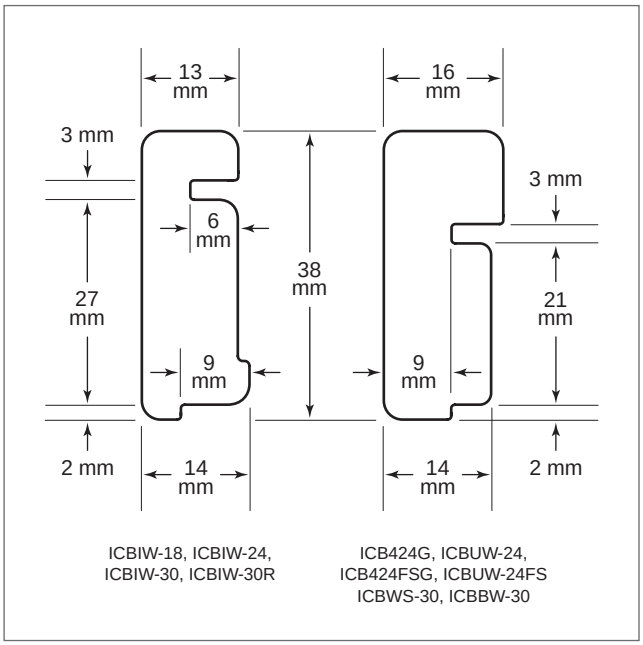


Wine rack wood facing profile.

## Overlay | Flush Inset Panels—ICBWS-30 | ICBBW-30

### FULL-SCALE TEMPLATE

Overlay and flush inset panels must be a minimum of 16 mm thick to support mounting the handle. Panel thickness does not include backer and spacer panel. Mount handle close to the opening edge of the door.

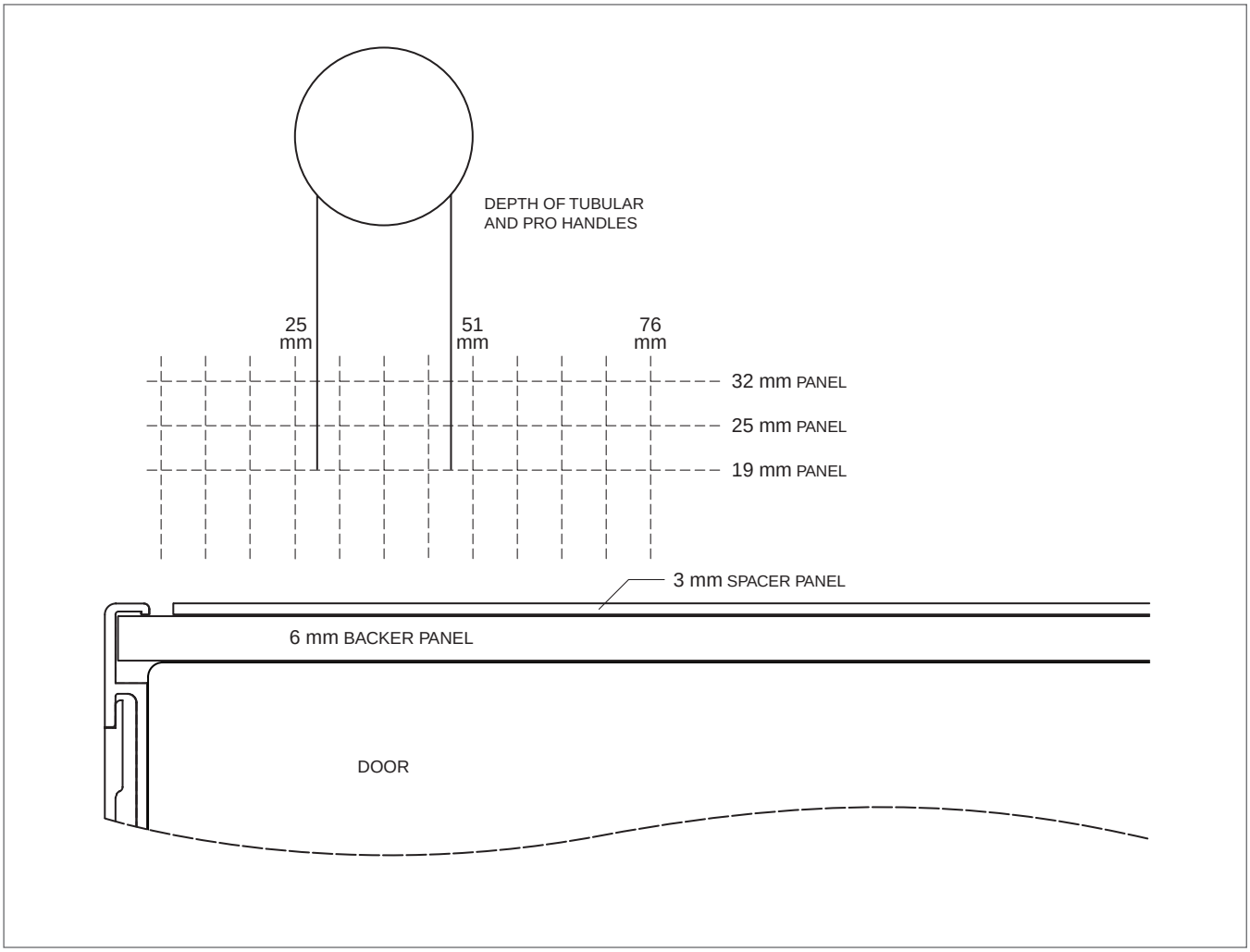


Overlay and flush inset panel thickness.

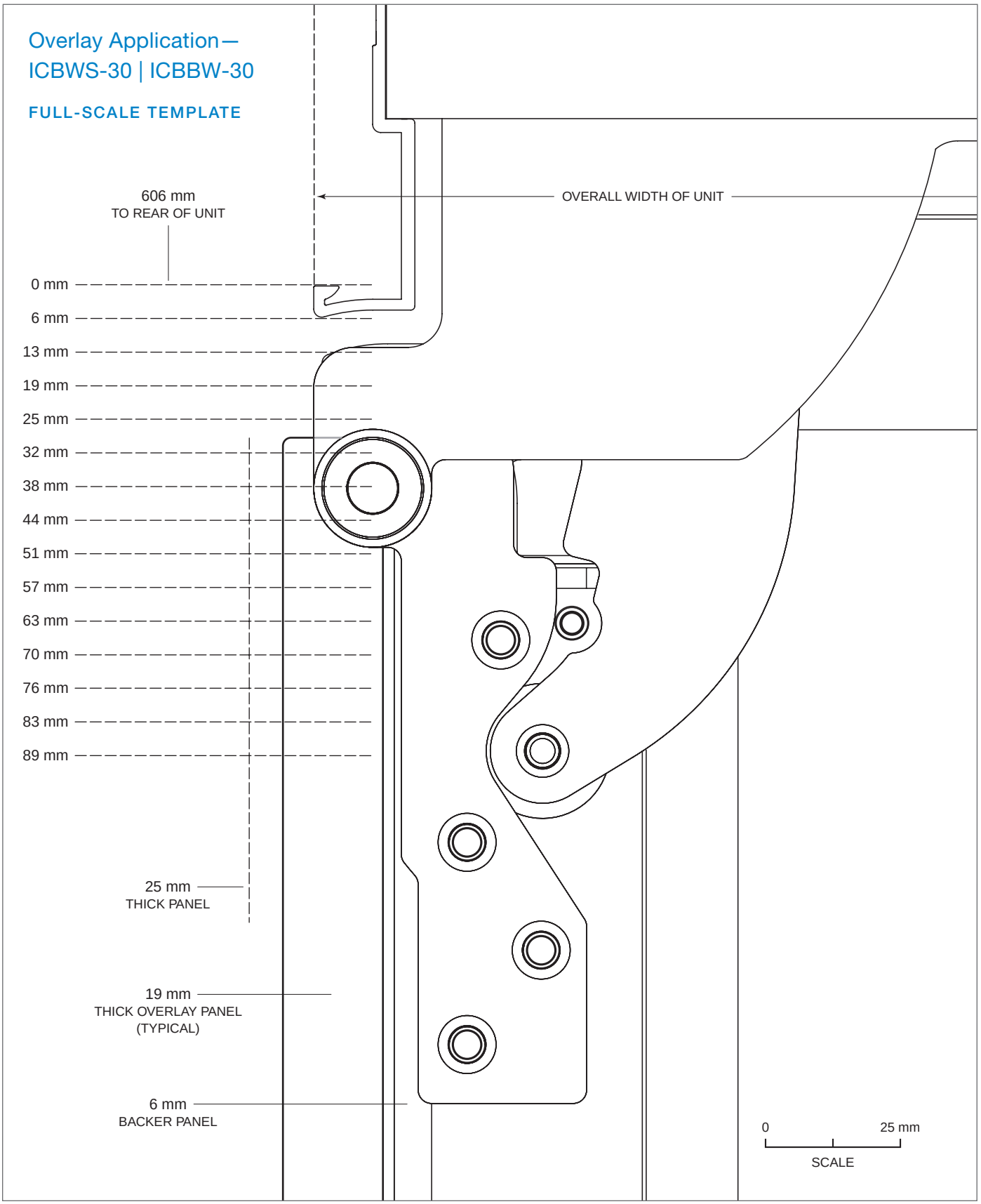


90° door opening (top view).

## Flush Inset Application—ICBWS-30 | ICBBW-30

### FULL-SCALE TEMPLATE

For panels thicker than 19 mm, a 90° door stop may be required to prevent interference with adjacent cabinets.

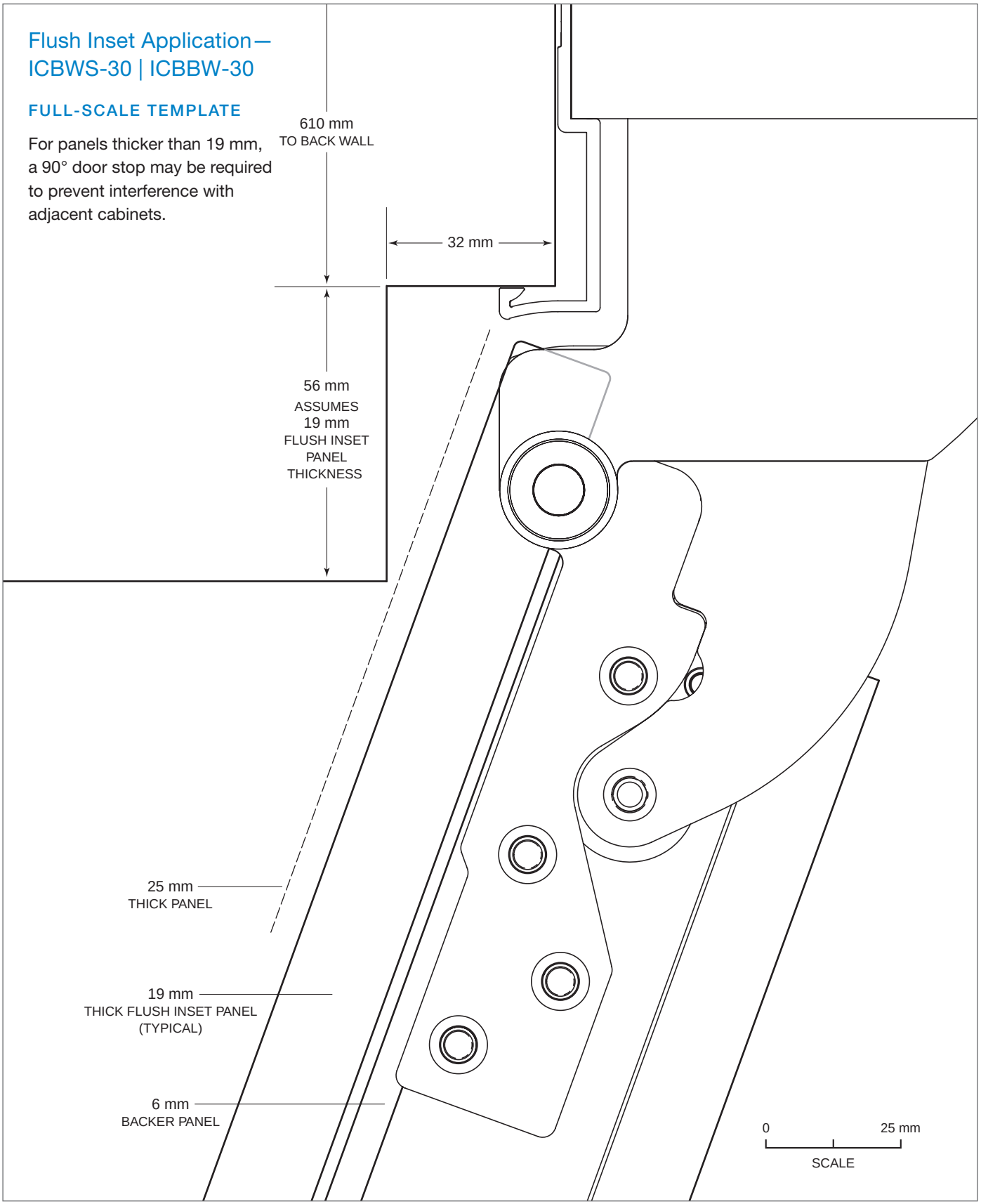


110° door opening (top view).

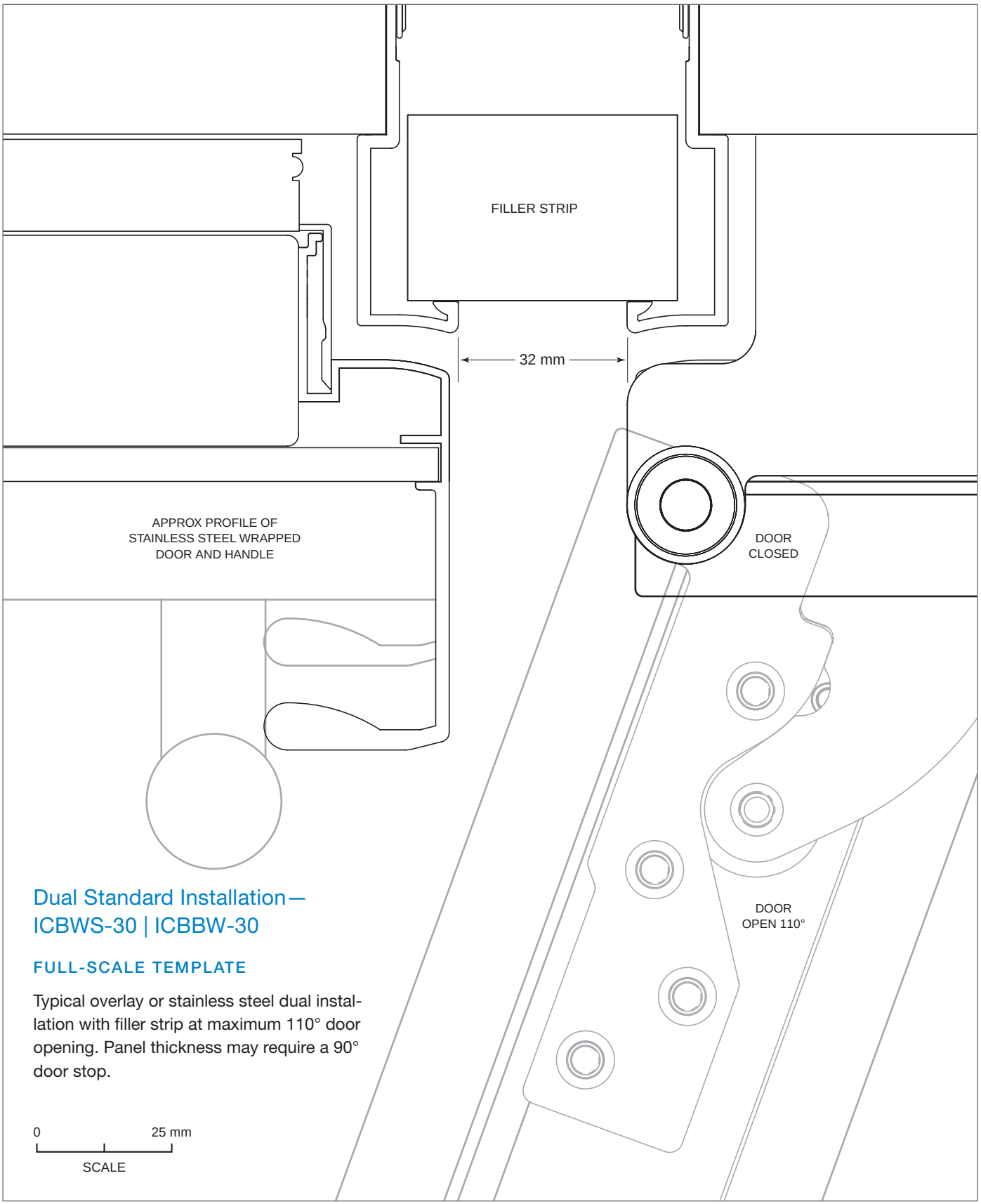


## Dual Standard Installation—ICBWS-30 | ICBBW-30

### FULL-SCALE TEMPLATE

Typical overlay or stainless steel dual installation with filler strip at maximum 110° door opening. Panel thickness may require a 90° door stop.

Dual standard installation (top view).

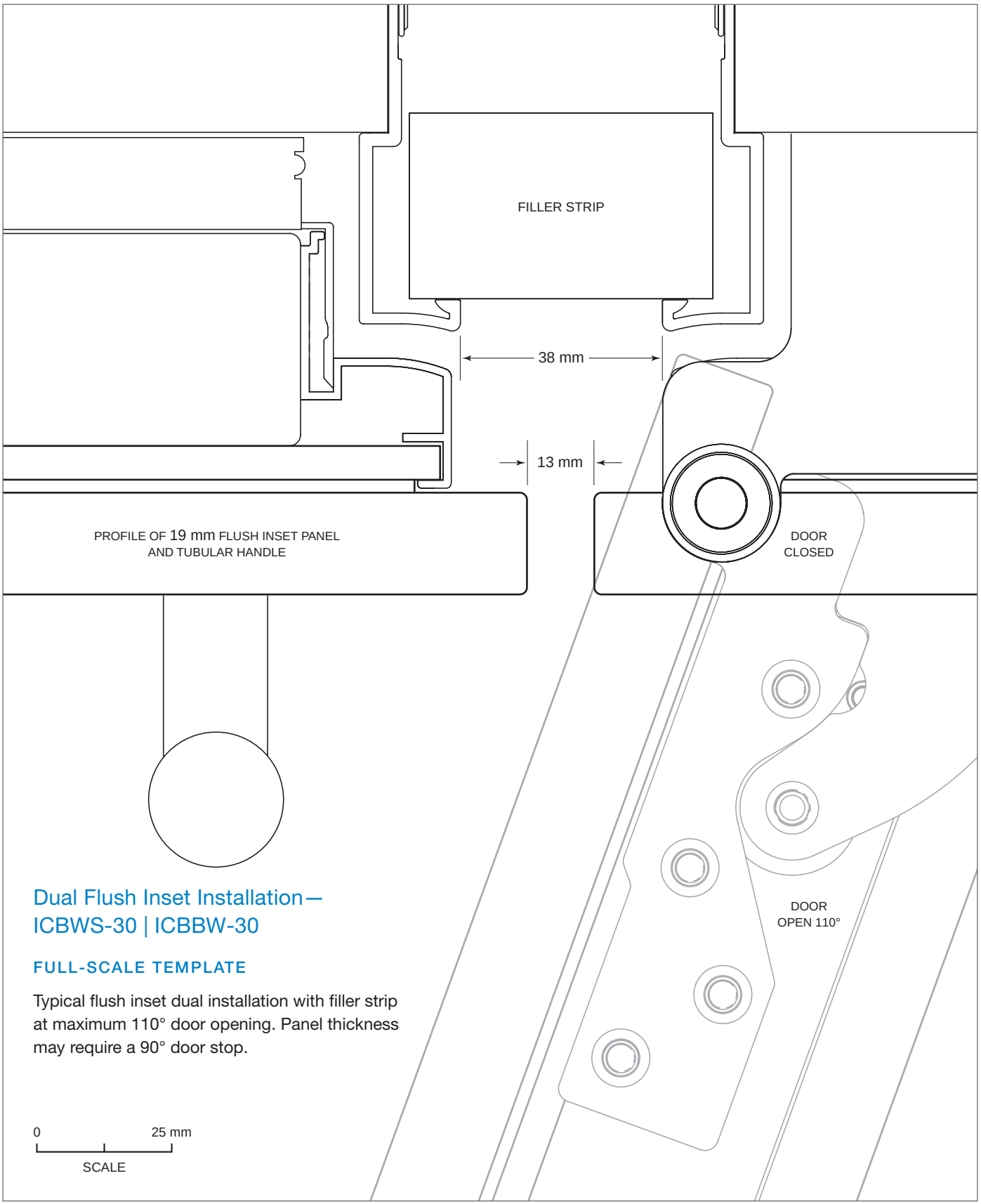


## Dual Flush Inset Installation—ICBWS-30 | ICBBW-30

### FULL-SCALE TEMPLATE

Typical flush inset dual installation with filler strip at maximum 110° door opening. Panel thickness may require a 90° door stop.

Dual flush inset installation (top view).

# Sub-Zero International Limited Warranty

FOR RESIDENTIAL USE

## FULL TWO YEAR WARRANTY*

For two years from the date of original installation, this Sub-Zero product warranty covers all parts and labor to repair or replace, under normal residential use, any part of the product that proves to be defective in materials or workmanship. All service provided by Sub-Zero under the above warranty must be performed by Sub-Zero factory certified service, unless otherwise specified by Sub-Zero, Inc. Service will be provided during normal business hours.

## FULL FIVE YEAR SEALED SYSTEM WARRANTY

For five years from the date of original installation, this Sub-Zero product warranty covers all parts and labor to repair or replace, under normal residential use, these parts that prove to be defective in materials or workmanship: compressor, condenser, evaporator, drier and all connecting tubing. All service provided by Sub-Zero under the above warranty must be performed by Sub-Zero factory certified service, unless otherwise specified by Sub-Zero, Inc. Service will be provided during normal business hours.

For more information regarding your Sub-Zero product warranty, contact your authorized Sub-Zero dealer. Warranties must comply to all country, state, city, local and or ordinance.

*Stainless steel (doors, panels, handles, product frames and interior surfaces) are covered by a limited 60-day parts and labor warranty for cosmetic defects.

*Replacement water filters and air purification cartridges are not covered by the product warranty.

Sub-Zero, Sub-Zero & Design, Sub-Zero & Snowflake Design, Dual Refrigeration, The Living Kitchen, Great American Kitchens The Fine Art of Kitchen Design, Wolf, Wolf & Design, Wolf Gourmet, W & Design, red colored knobs, Cove, and Cove & Design, are registered trademarks and service marks of Sub-Zero Group, Inc. and its subsidiaries. All other trademarks are property of their respective owners in the United States and other countries.

SUB·ZERO GROUP AUSTRALIA PTY LTD

Bank House, 11 – 19 Bank Place.
Melbourne Victoria Australia 3000
Telephone 03 9600 2218

enquiries@subzero.com

SUBZERO-WOLF.COM.AU