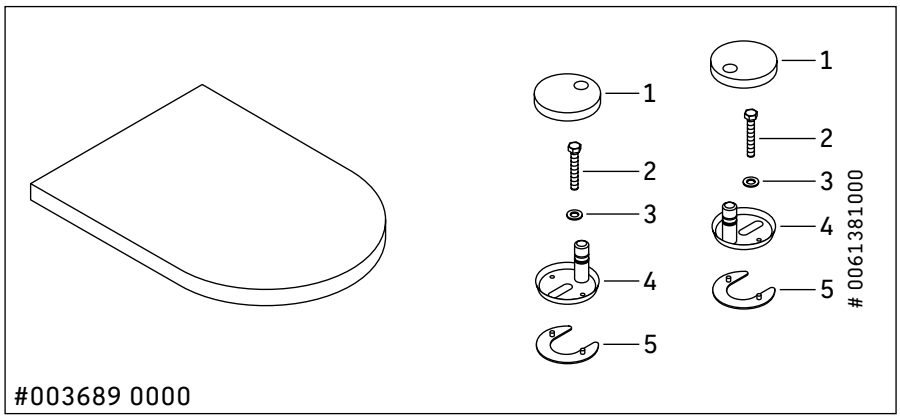

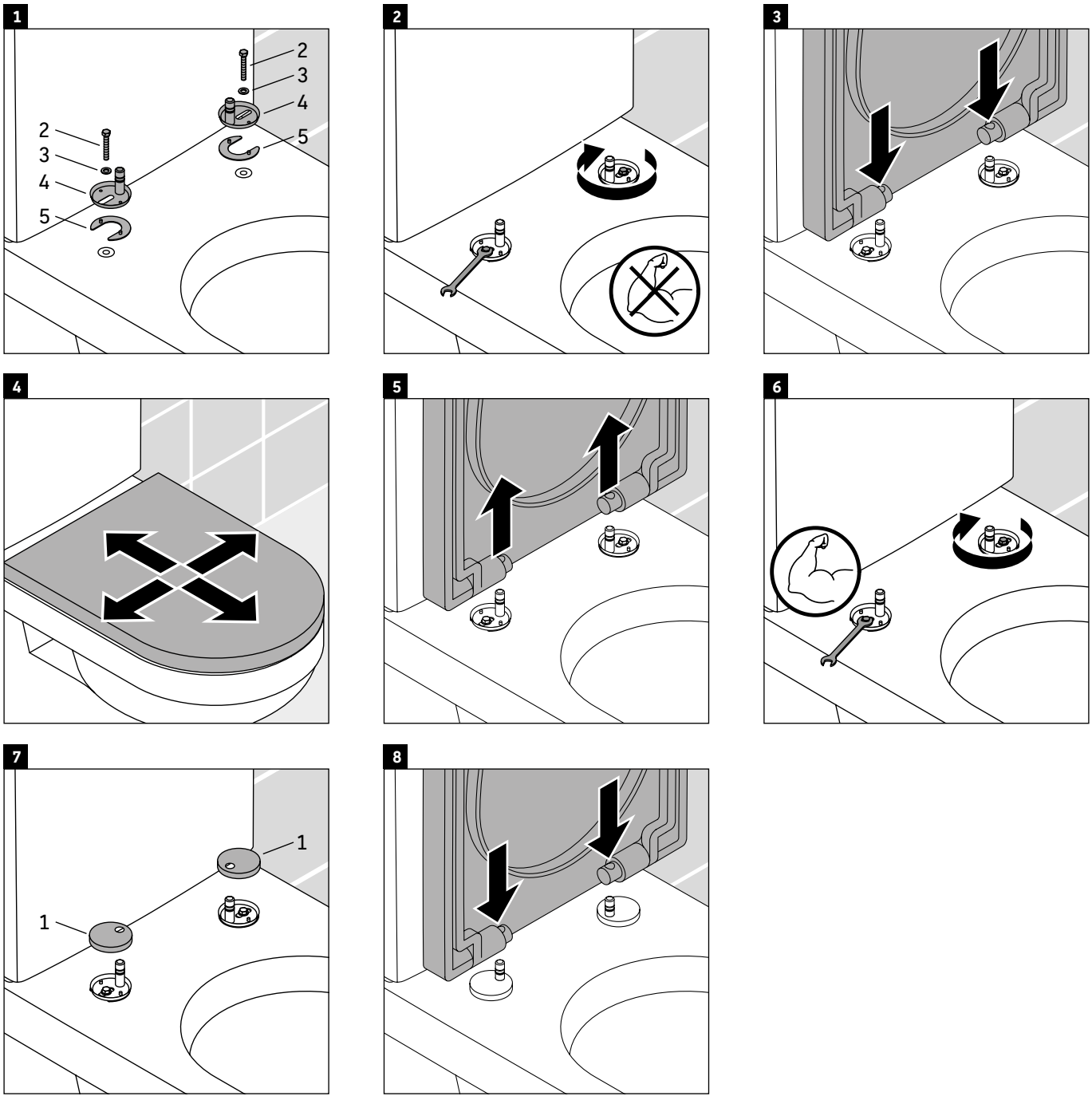

DURAVIT AG, Werderstr. 36, 78132 Hornberg, Germany, Phone +49 78 33 700, Fax +49 78 33 70 289, info@duravit.de, www.duravit.de

107891/MA149
Best.-Nr. 53794/19.11.4 We reserve the right to make technical improvements and enhance the appearance of the products shown.